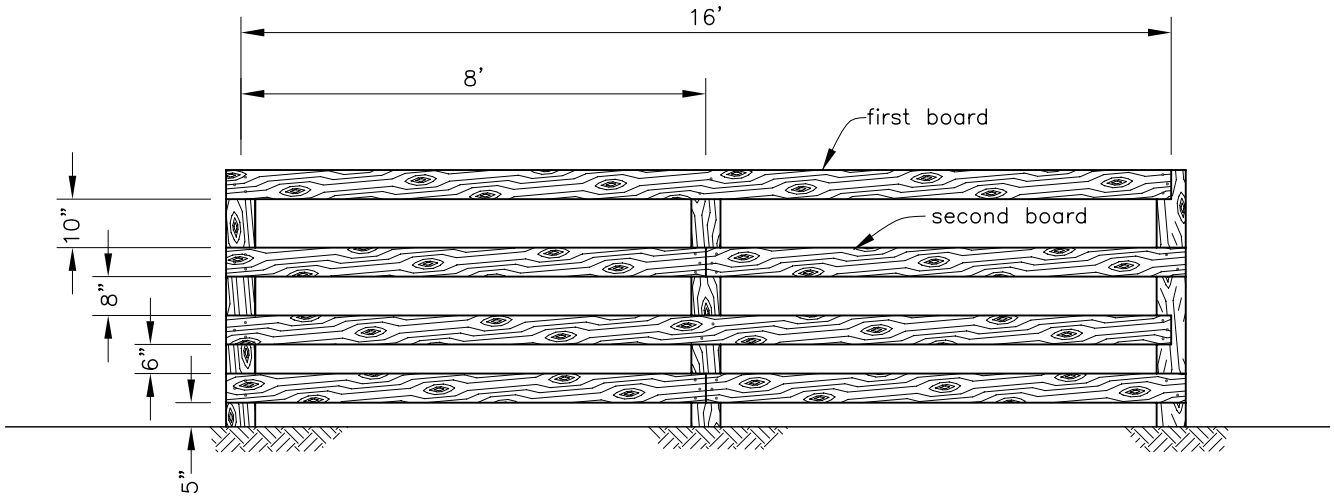

STRAIGHT PANEL

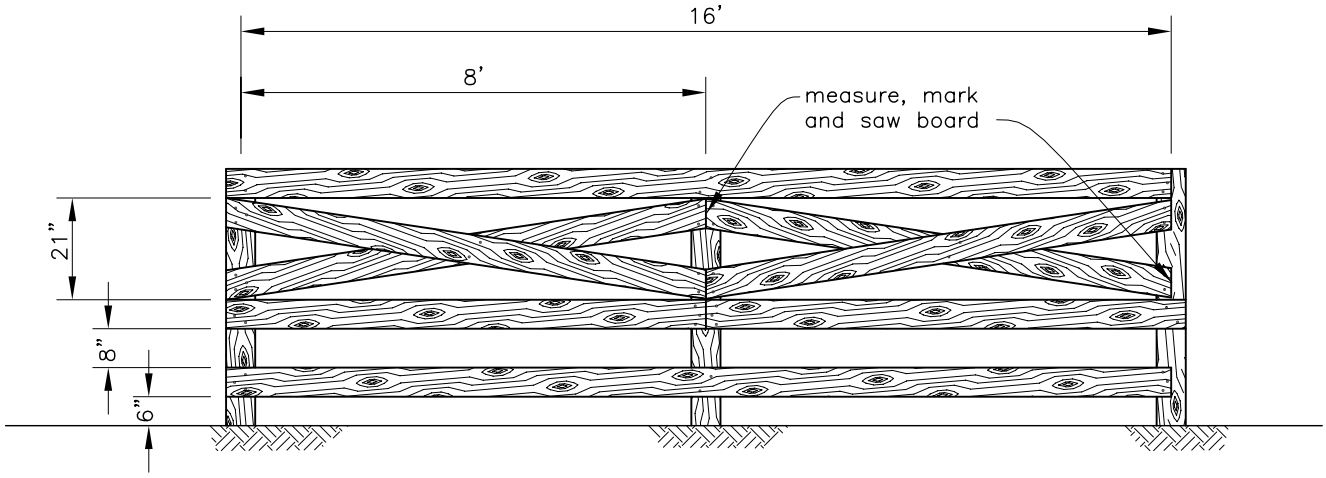

DIAMOND PANEL

1. Place 16 ft. board at top of first two spans for rough measurement and mark for sawing.
2. Saw ends of board. Apply wood preservative generously to freshly cut surfaces if using treated lumber.
3. Nail board to all three posts with at least two nails in each post (3 nails are better).
4. Measure second board from first post to center of second post. Space and nail board.
5. Measure, saw (apply preservative) and nail remaining boards in same manner.
6. For diamond panel: Place 4" board in position on fence and mark for sawing. Saw as marked. Nail boards in position.
7. For corrals or barn lots, 8 inch wide x 2 inch thick boards are required.

Drawing not to scale. Standardized drawing must be adapted to the specific site.

JOB CLASS

NRCS
Natural Resources Conservation Service
United States Department of Agriculture

BOARD FENCE

RHODE ISLAND

	Date	File Name
Designed		MTSD382120.DWG
Checked		Drawing Name
Approved		MT–SD–382.120
Title		Sheet of

Clear Form

Print Form