United States Department of Agriculture
Natural Resources Conservation Service

Ecological Site Description

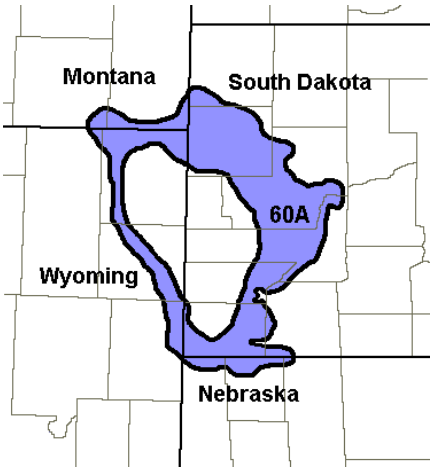

Site Type: Rangeland

Site Name: Saline Subirrigated

Site ID: R060AY036SD

Major Land Resource Area (MLRA): 60A – Pierre Shale Plains

Physiographic Features

This site is nearly level to gently sloping and occurs on river valleys.

Landform: alluvial fan, flood plain, stream terrace **Aspect:** N/A

	Minimum	Maximum
Elevation (feet):	2,500	4,300
Slope (percent):	0	3
Water Table Depth (inches):	12	48
Flooding:		
Frequency:	Rare	Occasional
Duration:	Very brief	Brief
Ponding:		
Depth (inches):	None	None
Frequency:	None	None
Duration:	None	None
Runoff Class:	Low	Medium

Climatic Features

The climate in this MLRA is typical of the drier portions of the Northern Great Plains where sagebrush steppes to the west yield to grassland steppes to the east. Annual precipitation ranges from 13 to 18 inches per year, with most occurring during the growing season. Temperatures show a wide range between summer and winter and between daily maximums and minimums, due to the high elevation and dry air, which permits rapid incoming and outgoing radiation. Cold air masses from Canada in winter move rapidly from northwest to southeast and account for extreme minimum temperatures. Chinook winds may occur in winter and bring rapid rises in temperature. Extreme storms may occur during the winter, but most severely affect ranch operations during late winter and spring. The normal average annual temperature is about 46°F. January is the coldest month with average temperatures ranging from about 19°F (Moorcroft CAA, Wyoming (WY)), to about 22°F (Belle Fourche, South Dakota (SD)). July is the warmest month with temperatures averaging from about 70°F (Moorcroft CAA, WY), to about 72°F (Belle Fourche, SD). The range of normal average monthly temperatures between the coldest and warmest months is about 51°F. Hourly winds are estimated to average about 11 miles per hour (mph) annually, ranging from about 13 mph during the spring to about 10 mph during the summer. Daytime winds are generally stronger than nighttime and occasional strong storms may bring brief periods of high winds with gusts to more than 50 mph.

Growth of cool-season plants begins in early to mid-March, slowing or ceasing in late June. Warm-season plants begin growth about mid-May and can continue to early or mid-September. Greenup of cool season plants may occur in September and October when adequate soil moisture is present.

	Minimum	Maximum
Frost-free period (days):	122	129
Freeze-free period (days):	145	152
Mean Annual Precipitation (inches):	13	18

Average Monthly Precipitation (inches) and Temperature (ºF):

	Precip. Min.	Precip. Max	Temp. Min.	Temp. Max.
January	0.32	0.43	7.1	34.1
February	0.44	0.57	12.6	40.1
March	0.65	0.94	19.7	46.5
April	1.43	1.72	29.4	60.2
May	2.45	3.19	39.7	70.6
June	2.34	3.38	48.5	80.1
July	1.60	2.78	54.8	88.0
August	1.24	1.76	53.1	87.7
September	1.01	1.50	42.3	77.0
October	0.90	1.11	31.4	64.9
November	0.40	0.61	19.8	47.5
December	0.40	0.48	10.2	38.0

Climate Stations		Period	
Station ID	**Location or Name**	**From**	**To**
SD0236	Ardmore 2 N	1948	1999
SD0559	Belle Fourche	1948	1999
SD1124	Buffalo Gap	1951	1999
WY6395	Moorcroft CAA	1948	1998
WY9207	Upton 13 SW	1949	1998

For other climate stations that may be more representative, refer to http://www.wcc.nrcs.usda.gov.

Influencing Water Features

Wetland Description:	System	Subsystem	Class	Sub-class
Cowardin, et al., 1979	Palustrine	N/A	Emergent Wetland	Persistent

Stream Type: None (Rosgen System)

Representative Soil Features

The soils in this site are somewhat poorly drained and formed in loamy or sandy alluvium. The surface layer is 1 to 12 inches thick. The texture of the subsurface ranges from very fine sandy loam to clay loam. Finer textured layers may occur in the lower parts of some profiles. This site should show no evidence of rills, wind scoured areas, or pedestalled plants. Water flow paths are broken, irregular in appearance, or discontinuous with numerous debris dams or vegetative barriers. The soil surface is stable and intact.

More information can be found in the various soil survey reports. Contact the local USDA Service Center for soil survey reports that include more detail specific to your location.

Parent Material Kind: alluvium
Parent Material Origin: mixed
Surface Texture: clay loam, loam, very fine sandy loam
Surface Texture Modifier: none
Subsurface Texture Group: loamy
Surface Fragments ≤3" (% Cover): 0
Surface Fragments >3" (%Cover): 0
Subsurface Fragments ≤3" (% Volume): 0-10
Subsurface Fragments >3" (% Volume): 0-5

	Minimum	Maximum
Drainage Class:	poorly	somewhat poorly
Permeability Class:	moderately slow	moderately rapid
Depth (inches):	80	80
Electrical Conductivity (mmhos/cm)*:	2	16
Sodium Absorption Ratio*:	0	13
Soil Reaction (1:1 Water)*:	6.6	8.4
Soil Reaction (0.1M CaCl2)*:	NA	NA
Available Water Capacity (inches)*:	5	7
Calcium Carbonate Equivalent (percent)*:	0	10

*These attributes represent from 0-40 inches or to the first restrictive layer.

Plant Communities

Ecological Dynamics of the Site:
This site developed under Northern Great Plains climatic conditions, natural influences of large herbivores, occasional fire, and other biotic and abiotic factors that typically influence soil/site development. Changes will occur in the plant communities due to short-term weather variations, impacts of native and/or exotic plant and animal species, and management actions. While the following plant community descriptions describe more typical transitions between communities that will occur, severe disturbances, such as periods of well below average precipitation, can cause significant shifts in plant communities and/or species composition.

As this site deteriorates, species such as inland saltgrass and foxtail barley increase. Grasses such as alkali sacaton, alkali cordgrass, western wheatgrass, and slender wheatgrass will decrease in frequency and production.

The plant community upon which interpretations are primarily based is the Historic Climax Plant Community (HCPC). The HCPC has been determined by studying rangeland relic areas, areas protected from excessive disturbance, and areas under long-term rotational grazing regimes. Trends in plant community dynamics ranging from heavily grazed to lightly grazed areas, seasonal use pastures, and historical accounts also have been used. Plant communities, states, transitional pathways, and thresholds have been determined through similar studies and experience.

The following is a diagram that illustrates the common plant communities that can occur on the site and the transition pathways between communities. The ecological processes are discussed in more detail in the plant community descriptions following the diagram.

Plant Communities and Transitional Pathways

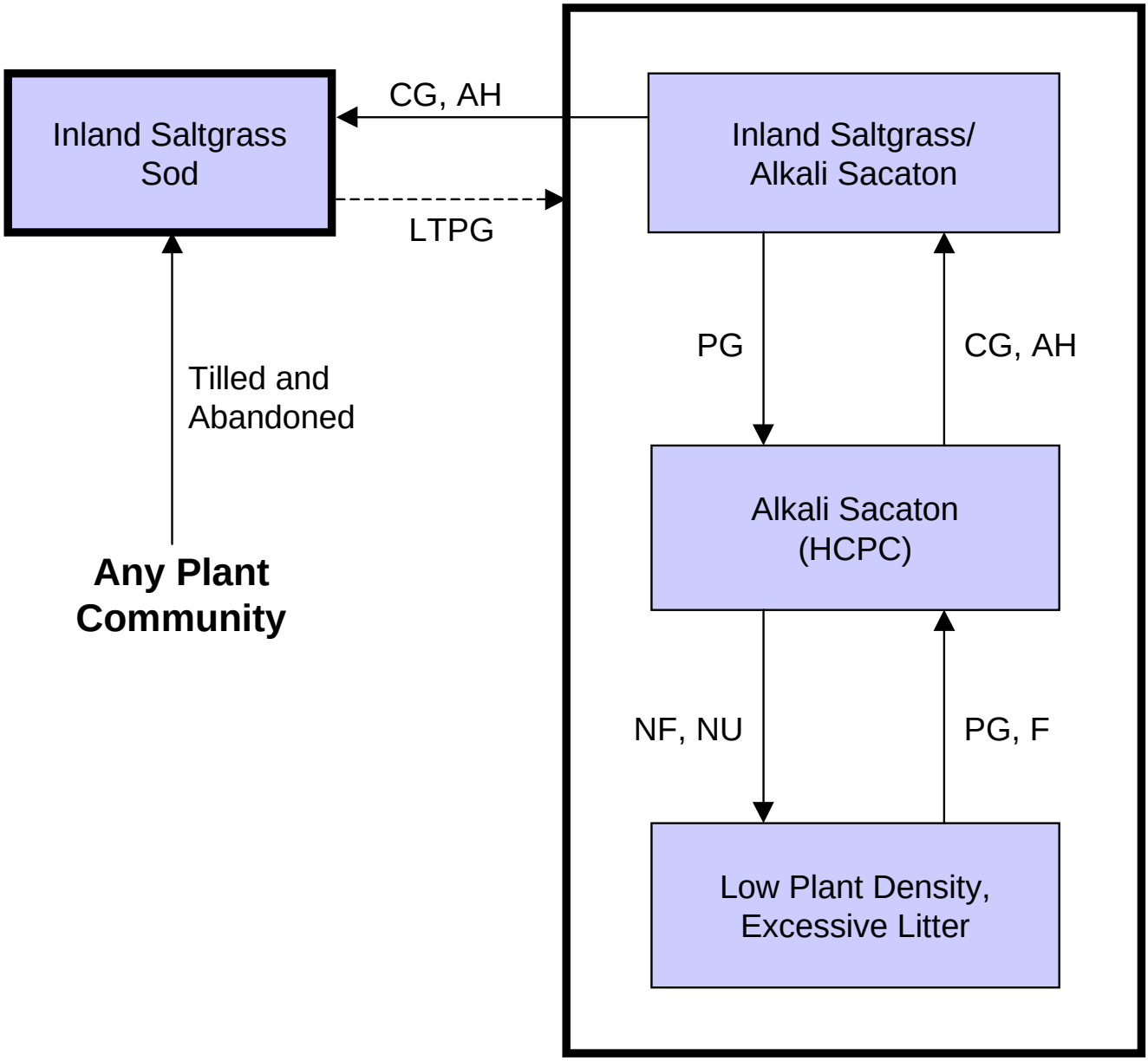

AH - annual haying; **CG** - continuous grazing w/o adequate recovery periods; **F-** Fire; **HCPC** - Historic Climax Plant Community; **LTPG -** long term prescribed grazing (> 40 years); **NF-** no fire; **NU** - non-use; **PG** - prescribed grazing with adequate recovery periods.

Plant Community Composition and Group Annual Production

			Alkali Sacaton (HCPC)		
COMMON/GROUP NAME	**SCIENTIFIC NAME**	**SYMBOL**	**Group**	**lbs./acre**	**% Comp**
GRASSES				*2240 - 2660*	*80 - 95*
alkali sacaton	Sporobolus airoides	SPAI	1	560 - 1120	20 - 40
inland saltgrass	Distichlis spicata	DISP	2	280 - 560	10 - 20
western wheatgrass	Pascopyrum smithii	PASM	3	280 - 560	10 - 20
WARM-SEASON GRASSES			**4**	**140 - 700**	**5 - 25**
switchgrass	Panicum virgatum	PAVI2	4	0 - 420	0 - 15
sand dropseed	Sporobolus cryptandrus	SPCR	4	0 - 280	0 - 10
alkali cordgrass	Spartina gracilis	SPGR	4	0 - 280	0 - 10
alkali muhly	Muhlenbergia asperifolia	MUAS	4	0 - 140	0 - 5
blue grama	Bouteloua gracilis	BOGR2	4	0 - 140	0 - 5
little bluestem	Schizachyrium scoparium	SCSC	4	0 - 140	0 - 5
OTHER NATIVE GRASSES			**5**	**280 - 560**	**10 - 20**
plains bluegrass	Poa arida	POAR3	5	140 - 280	5 - 10
slender wheatgrass	Elymus trachycaulus ssp. trachycaulus	ELTRT	5	140 - 280	5 - 10
foxtail barley	Hordeum jubatum	HOJU	5	0 - 140	0 - 5
other perennial grasses		2GP	5	0 - 140	0 - 5
GRASS-LIKES			*7*	*140 - 420*	*5 - 15*
sedge	Carex spp.	CAREX	7	0 - 280	0 - 10
Baltic rush	Juncus balticus	JUBA	7	0 - 140	0 - 5
rush	Juncus spp.	JUNCU	7	0 - 140	0 - 5
spikerush	Eleocharis spp.	ELEOC	7	0 - 140	0 - 5
bulrush	Schoenoplectus spp.	SCHOE6	7	0 - 140	0 - 5
FORBS			*8*	*0 - 140*	*0 - 5*
arrowgrass	Triglochin palustre	TRPA6	8	0 - 28	0 - 1
cudweed sagewort	Artemisia ludoviciana	ARLU	8	0 - 28	0 - 1
heath aster	Symphyotrichum ericoides	SYER	8	0 - 28	0 - 1
milkvetch	Astragalus spp.	ASTRA	8	0 - 28	0 - 1
prairie gentian	Eustoma exaltatum ssp. russellianum	EUEXR	8	0 - 28	0 - 1
Pursh seepweed	Suaeda calceoliformis	SUCA2	8	0 - 28	0 - 1
scouringrush	Equisetum hyemale	EQHY	8	0 - 28	0 - 1
western ragweed	Ambrosia psilostachya	AMPS	8	0 - 28	0 - 1
other perennial forbs		2FP	8	0 - 56	0 - 2

Annual Production lbs./acre	LOW	RV	HIGH
GRASSES	1965 -	2450	- 2905
GRASS-LIKES	135 -	280	- 450
FORBS	0 -	70	- 145
TOTAL	2100 -	2800	- 3500

This list of plants and their relative proportions are based on near normal years. Fluctuations in species composition and relative production may change from year to year dependent upon precipitation or other climatic factors. RV = Representative value.

Plant Community Composition and Group Annual Production

		Alkali Sacaton (HCPC)			Inland Saltgrass/ Alkali Sacaton			Low Plant Density, Excessive Litter			Inland Saltgrass Sod		
COMMON/GROUP NAME	**SYMBOL**	**Grp**	**lbs./acre**	**% Comp**	**Grp**	**lbs./acre**	**% Comp**	**Grp**	**lbs./acre**	**% Comp**	**Grp**	**lbs./acre**	**% Comp**
GRASSES			*2240 - 2660*	*80 - 95*		*1360 - 1615*	*80 - 95*		*1425 - 1710*	*75 - 90*		*800 - 950*	*80 - 95*
alkali sacaton	SPAI	1	560 - 1120	20 - 40	1	255 - 510	15 - 30	1	285 - 570	15 - 30	1	0 - 100	0 - 10
inland saltgrass	DISP	2	280 - 560	10 - 20	2	255 - 510	15 - 30	2	285 - 475	15 - 25	2	400 - 800	40 - 80
western wheatgrass	PASM	3	280 - 560	10 - 20	3	85 - 170	5 - 10	3	285 - 475	15 - 25	3		
WARM-SEASON GRASSES		**4**	**140 - 700**	**5 - 25**	**4**	**85 - 340**	**5 - 20**	**4**	**95 - 380**	**5 - 20**	**4**	**0 - 50**	**0 - 5**
switchgrass	PAVI2	4	0 - 420	0 - 15	4	0 - 85	0 - 5	4	0 - 95	0 - 5			
sand dropseed	SPCR	4	0 - 280	0 - 10	4	0 - 170	0 - 10	4	0 - 190	0 - 10	4	0 - 50	0 - 5
alkali cordgrass	SPGR	4	0 - 280	0 - 10	4	0 - 85	0 - 5	4	0 - 190	0 - 10			
alkali muhly	MUAS	4	0 - 140	0 - 5	4	17 - 136	1 - 8	4	0 - 95	0 - 5	4	0 - 50	0 - 5
blue grama	BOGR2	4	0 - 140	0 - 5	4	0 - 51	0 - 3	4	0 - 57	0 - 3	4	0 - 20	0 - 2
little bluestem	SCSC	4	0 - 140	0 - 5	4	0 - 51	0 - 3	4	0 - 57	0 - 3			
OTHER NATIVE GRASSES		**5**	**280 - 560**	**10 - 20**	**5**	**85 - 255**	**5 - 15**	**5**	**190 - 475**	**10 - 25**	**5**	**50 - 150**	**5 - 15**
plains bluegrass	POAR3	5	140 - 280	5 - 10	5	0 - 85	0 - 5	5	95 - 285	5 - 15	5	0 - 30	0 - 3
slender wheatgrass	ELTRT	5	140 - 280	5 - 10	5	0 - 85	0 - 5	5	95 - 190	5 - 10			
foxtail barley	HOJU	5	0 - 140	0 - 5	5	85 - 170	5 - 10	5	38 - 152	2 - 8	5	30 - 150	3 - 15
other perennial grasses	2GP	5	0 - 140	0 - 5	5	0 - 34	0 - 2	5	0 - 95	0 - 5	5	0 - 20	0 - 2
NON-NATIVE GRASSES		**6**			**6**	**0 - 85**	**0 - 5**	**6**	**38 - 190**	**2 - 10**	**6**	**0 - 50**	**0 - 5**
cheatgrass	BRTE				6	0 - 51	0 - 3	6	0 - 95	0 - 5	6	0 - 30	0 - 3
Kentucky bluegrass	POPR				6	0 - 85	0 - 5	6	0 - 152	0 - 8	6	0 - 40	0 - 4
GRASS-LIKES		*7*	*140 - 420*	*5 - 15*	*7*	*85 - 255*	*5 - 15*	*7*	*190 - 380*	*10 - 20*	*7*	*50 - 150*	*5 - 15*
sedge	CAREX	7	0 - 280	0 - 10	7	0 - 85	0 - 5	7	95 - 285	5 - 15	7	0 - 50	0 - 5
Baltic rush	JUBA	7	0 - 140	0 - 5	7	0 - 85	0 - 5	7	0 - 190	0 - 10	7	0 - 50	0 - 5
rush	JUNCU	7	0 - 140	0 - 5	7	0 - 85	0 - 5	7	0 - 190	0 - 10	7	0 - 50	0 - 5
spikerush	ELEOC	7	0 - 140	0 - 5	7	0 - 85	0 - 5	7	0 - 190	0 - 10	7	0 - 50	0 - 5
bulrush	SCHOE6	7	0 - 140	0 - 5	7	0 - 85	0 - 5	7	0 - 190	0 - 10	7	0 - 50	0 - 5
FORBS		*8*	*0 - 140*	*0 - 5*	*8*	*17 - 85*	*1 - 5*	*8*	*19 - 95*	*1 - 5*	*8*	*10 - 50*	*1 - 5*
arrowgrass	TRPA6	8	0 - 28	0 - 1	8	0 - 17	0 - 1	8	0 - 19	0 - 1	8	0 - 10	0 - 1
common dandelion	TAOF				8	0 - 17	0 - 1	8	0 - 38	0 - 2	8	0 - 10	0 - 1
cudweed sagewort	ARLU	8	0 - 28	0 - 1	8	0 - 34	0 - 2	8	0 - 38	0 - 2	8	0 - 20	0 - 2
curly dock	RUCR				8	0 - 17	0 - 1	8	0 - 19	0 - 1	8	0 - 20	0 - 2
heath aster	SYER	8	0 - 28	0 - 1	8	0 - 17	0 - 1	8	0 - 19	0 - 1	8	0 - 10	0 - 1
kochia	KOSC				8	0 - 17	0 - 1	8	0 - 19	0 - 1	8	0 - 20	0 - 2
milkvetch	ASTRA	8	0 - 28	0 - 1	8	0 - 17	0 - 1	8	0 - 19	0 - 1	8	0 - 10	0 - 1
prairie gentian	EUEXR	8	0 - 28	0 - 1				8	0 - 19	0 - 1			
Pursh seepweed	SUCA2	8	0 - 28	0 - 1	8	0 - 17	0 - 1	8	0 - 19	0 - 1	8	0 - 10	0 - 1
Russian thistle	SALSO				8	0 - 17	0 - 1	8	0 - 38	0 - 2	8	0 - 20	0 - 2
scouringrush	EQHY	8	0 - 28	0 - 1	8	0 - 17	0 - 1	8	0 - 19	0 - 1	8	0 - 10	0 - 1
thistle	CIRSI				8	0 - 17	0 - 1	8	0 - 38	0 - 2	8	0 - 20	0 - 2
western ragweed	AMPS	8	0 - 28	0 - 1	8	0 - 34	0 - 2	8	0 - 19	0 - 1	8	0 - 10	0 - 1
other perennial forbs	2FP	8	0 - 56	0 - 2	8	0 - 34	0 - 2	8	0 - 38	0 - 2	8	0 - 20	0 - 2
other annual forbs	2FA				8	0 - 34	0 - 2	8	0 - 57	0 - 3	8	0 - 20	0 - 2

Annual Production lbs./acre	LOW RV HIGH	LOW RV HIGH	LOW RV HIGH	LOW RV HIGH
GRASSES	1965 - 2450 - 2905	1205 - 1479 - 1735	1200 - 1558 - 1900	750 - 870 - 990
GRASS-LIKES	135 - 280 - 450	80 - 170 - 275	185 - 285 - 400	45 - 100 - 155
FORBS	0 - 70 - 145	15 - 51 - 90	15 - 57 - 100	5 - 30 - 55
TOTAL	2100 - 2800 - 3500	1300 - 1700 - 2100	1400 - 1900 - 2400	800 - 1000 - 1200

This list of plants and their relative proportions are based on near normal years. Fluctuations in species composition and relative production may change from year to year dependent upon precipitation or other climatic factors. RV = Representative value.

Plant Community and Vegetation State Narratives

Following are the narratives for each of the described plant communities. These plant communities may not represent every possibility, but they are the most prevalent and repeatable plant communities. The plant composition tables shown above have been developed from the best available knowledge at the time of this revision. As more information is collected, some of these plant community descriptions may be revised or removed, and new ones added. None of these plant communities should necessarily be thought of as "Desired Plant Communities" (DPCs). According to the USDA Natural Resources Conservation Service (NRCS) National Range and Pasture Handbook, DPCs will be determined by the decision makers and will meet minimum quality criteria established by the NRCS. The main purpose for including any description of a plant community here is to capture the current knowledge and experience at the time of this revision.

Alkali Sacaton Plant Community

Interpretations are based primarily on the Alkali Sacaton Plant Community. This is also considered the HCPC. This plant community can be found on areas that are properly managed with grazing and/or prescribed burning, and sometimes on areas receiving occasional short periods of deferment. This plant community consists mainly of mid-warm and cool-season grasses. The principle dominant plants are alkali sacaton, inland saltgrass, and western wheatgrass. Grasses of secondary importance are alkali cordgrass, slender wheatgrass, little bluestem, and foxtail barley. Blue grasses, sedges, and spike rushes occur as an understory. Forbs such as heath aster, milkvetch, and prairie gentian are significant. This plant community is about 80-95 percent grasses, 5-15 percent grass-likes, and 0-5 percent forbs.

This plant community is adapted to high salt content inherent of the soils. White crusts can occupy many areas of the soil surface due to seasonal fluctuations in the water table. Plant litter is properly distributed with very little movement off-site and natural plant mortality is very low. Most plant species have a wide range of age classes represented and reproduction is not limited.

The following growth curve shows the estimated monthly percentages of total annual growth of the dominant species expected during an average year:
Growth curve number: SD6009
Growth curve name: Pierre Shale Plains, warm-season dominant, cool-season subdominant.
Growth curve description: Warm-season dominant, cool-season subdominant, lowland.

JAN	FEB	MAR	APR	MAY	JUN	JUL	AUG	SEP	OCT	NOV	DEC
0	0	3	10	16	22	23	14	7	5	0	0

Transitional pathways and/or community pathways leading to other plant communities are as follows:

- Continuous grazing without adequate recovery periods following grazing events or annual haying will convert this plant community to the *Inland Saltgrass/Alkali Sacaton Plant Community*.

- Nonuse and no fire will convert this plant community to the *Low Plant Density, Excessive Litter Plant Community.*

Inland Saltgrass, Alkali Sacaton Plant Community

This plant community developed with relatively short term continuous grazing without periodic deferment or with annual haying. Plants resistant to removal are maintaining vigor. The potential vegetation is about 80-95 percent grasses, 5-15 percent grass-like plants, and 1-5 percent forbs. Inland saltgrass and alkali sacaton have increased in abundance. Most of the palatable plants such

as western wheatgrass, slender wheatgrass, and alkali cordgrass are present but occur in lesser amounts.

The soil is stable; however, plant diversity has been reduced. The water cycle, nutrient cycle, and energy flow are slightly reduced but continue to adequately function. This community indicates key management concerns. Proper grazing management techniques at this point will stabilize the community at or near the Alkali Sacaton Plant Community. Increased disturbance can easily move the community to a more degraded scenario.

The following growth curve shows the estimated monthly percentages of total annual growth of the dominant species expected during an average year:
Growth curve number: SD6009
Growth curve name: Pierre Shale Plains, warm-season dominant, cool-season subdominant.
Growth curve description: Warm-season dominant, cool-season subdominant, lowland.

JAN	FEB	MAR	APR	MAY	JUN	JUL	AUG	SEP	OCT	NOV	DEC
0	0	3	10	16	22	23	14	7	5	0	0

Transitional pathways and/or community pathways leading to other plant communities are as follows:

- Continuous grazing or annual haying with no recovery opportunity shifts this plant community to the *Inland Saltgrass Sod Plant Community*.

- Prescribed grazing with adequate recovery opportunity will restore this community back to the *Alkali Sacaton Plant Community*.

Low Plant Density, Excessive Litter Plant Community

This plant community occurs after an extended period of nonuse by domestic livestock. Fire is uncommon or absent. Litter has amounts increased causing plant density to decrease. Typically, bunchgrasses (alkali sacaton) have developed dead centers and rhizomatous grasses (inland saltgrass) form small colonies because of a lack of tiller stimulation. Salt crusts and/or annual plant species such as kochia and Russian thistle commonly fill bare ground areas. Plant frequency and production have decreased. The potential vegetation is about 75-90 percent grasses, 10-20 percent grass-like plants, and 1-5 percent forbs. Soil erosion is not a concern due to increased litter and landscape position.

The following growth curve shows the estimated monthly percentages of total annual growth of the dominant species expected during an average year:
Growth curve number: SD6008
Growth curve name: Pierre Shale Plains, lowland cool-season/warm-season codominant.
Growth curve description: Cool-season, warm-season codominant, lowland.

JAN	FEB	MAR	APR	MAY	JUN	JUL	AUG	SEP	OCT	NOV	DEC
0	0	4	11	19	23	20	12	6	5	0	0

Transitional pathways and/or community pathways leading to other plant communities are as follows:

- Prescribed grazing or fire with adequate recovery opportunity or prescribed burning will shift this plant community towards the *Alkali Sacaton Plant Community*.

Inland Saltgrass Sod Plant Community

This plant community developed with further continuous grazing or areas that have been tilled and abandoned. Inland saltgrass dominates this plant community and has developed into a sod bound condition. Alkali sacaton has been greatly reduced. Slender and western wheatgrass are gone and have been replaced by increased amounts of foxtail barley. Plains pricklypear has increased. Forbs such as kochia and Russian thistle have also increased. The potential vegetation is about 80-95 percent grasses, 5-15 percent grass-like plants, and 1-5 percent forbs. The plant community lacks diversity. Evaporation has increased resulting in a higher salt content on the soil surface. Organic matter/carbon reserves are severely diminished. It will take a long time to bring this plant community back to the Alkali Sacaton Plant Community with management alone. Renovation of this plant community would be very costly due to high salt content and water table.

The following growth curve shows the estimated monthly percentages of total annual growth of the dominant species expected during an average year:
Growth curve number: SD6010
Growth curve name: Pierre Shale Plains, lowland warm-season dominant.
Growth curve description: Warm-season dominant, lowland.

JAN	FEB	MAR	APR	MAY	JUN	JUL	AUG	SEP	OCT	NOV	DEC
0	0	2	8	15	21	26	15	8	5	0	0

Transitional pathways and/or community pathways leading to other plant communities are as follows:

- Long term prescribed grazing with adequate recovery periods between grazing events will move this plant community to the *Inland Saltgrass/Alkali Sacaton Plant Community* and eventually to the *Alkali Sacaton Plant Community*.

Ecological Site Interpretations

Animal Community – Wildlife Interpretations

The MLRA 60A lies within the drier portion of the northern mixed-grass prairie ecosystem where sagebrush steppes to the west yield to grassland steppes to the east. Prior to European settlement, this area consisted of diverse grass/shrub land habitats interspersed with varying densities of depressional, in-stream wetlands, and woody riparian corridors. These habitats provided critical life cycle components for many of its users. Many species of grassland birds, small mammals, reptiles, amphibians, and herds of roaming bison, elk, and pronghorn were among the inhabitants adapted to this semi-arid region. Roaming herbivores, as well as, several small mammal and insect species, were the primary consumers linking the grassland resources to predators such as the wolf, mountain lion, and grizzly bear, as well as, smaller carnivores such as the coyote, bobcat, fox, and raptors. The prairie dog was once abundant; however, the species remains a keystone species within its range. The black-footed ferret, burrowing owl, ferruginous hawk, mountain plover, and swift fox were associated with prairie dog complexes.

Historically, the northern mixed-grass prairie was a disturbance-driven ecosystem with fire, herbivory, and climate functioning as the primary disturbance factors either singly or in combination. Following European settlement, livestock grazing, cropland conversion, elimination of fire, energy development, and other anthropogenic factors influenced species composition and abundance. Introduced and invasive species further impacted plant and animal communities. Bison was a historical keystone species but have been extirpated as a free-ranging herbivore. The loss of the bison and prairie dog, and fire as ecological drivers greatly influenced the character of the remaining native plant

communities and altered wildlife habitats. Human development has reduced habitat quality for area-sensitive species.

Within MLRA 60A, the Saline Subirrigated ecological site provides upland/wetland complex cover with an associated shrub/forb component. It is typically part of an expansive grassland landscape that included combinations of Shallow Loamy, Shallow Clayey, Thin Loamy, Thin Claypan, Sandy, Sandy Claypan, Loamy, Loamy Terrace, Sandy Terrace, and Clayey Ecological Sites.

The Saline Subirrigated Ecological Site has remained relatively intact. This site may have sufficient hydrology to support hydrophytic vegetation and wildlife species associated with saturated saline soil conditions. Due to high salinity concentrations, both plant and wildlife species diversity is limited.

Alkali Sacaton (HCPC) and Inland Saltgrass/Alkali Sacaton: The predominance of grasses and grass-like plants provides adequate forage for grazers and mixed-feeders, such as deer, pronghorn, and small mammals. Insects, such as pollinators, play a large role in maintaining the forb community and provide a forage base for grassland birds and other species. Chestnut-collared longspur, vesper sparrow, long-billed curlew, western meadowlark, and sharp-tailed grouse benefit from the shorter structure and composition this plant community provides. Greater sage-grouse may use the site for brood rearing if big sagebrush is present on adjacent sites. Prey populations are likely less dense but may be more available for grassland raptors such as ferruginous hawk, Swainson's hawk, and northern harrier. This plant community provides lower quality habitat for Great Plains toad, bull snake, and western rattlesnake.

Resulting from relatively short-term continuous grazing with inadequate recovery periods or annual haying, inland saltgrass and alkali sacaton will dominate. Inland saltgrass increases and provides suboptimal forage opportunity for herbivores. Both forb diversity and abundance increase, providing a suitable forage base for insects, small mammals, and their predators.

Inland Saltgrass Sod: Resulting from further continuous grazing or from areas that have been tilled and abandoned, inland saltgrass sod will dominate. Inland saltgrass significantly increases and provides suboptimal forage opportunity for herbivores. Other grasses and grass-likes comprise a small component of the plant community. The lack of seed producing plants decreases forage opportunities for small mammals. Forb diversity and abundance remain at the same low levels but do provide a suitable forage base for insects. Insects, such as pollinators, play a large role in maintaining the forb community and provide a forage base for grassland birds and other species. Chestnut-collared longspur, vesper sparrow, long-billed curlew, and western meadowlark, benefit from the structure and composition this plant community provides. Prey populations are likely less dense but may be more available for grassland raptors such as ferruginous hawk, Swainson's hawk, and northern harrier. This plant community provides lower quality habitat for Great Plains toad, bull snake, and western rattlesnake.

Decadent Plants, Excessive Litter: Resulting from extended periods of nonuse or no fire, the plant community will become decadent and buildup litter. As plant litter accumulates, the grassland nesting bird composition may shift to favor those species that prefer dense litter (nonshort grass species); otherwise the wildlife community will remain largely unchanged.

Animal Preferences (Quarterly – 1,2,3,4†)

Common Name	Cattle	Sheep	Horses	Deer	Antelope	Bison	Elk
Grasses							
alkali cordgrass	U D D U	N U N N	U D D U	N U N N	N U N N	U D D U	U D D U
alkali muhly	U U D U	U U D U	U U D U	N N N N	N N N N	U U D U	U U D U
alkali sacaton	U D D U	N U N N	U D D U	N U N N	N U N N	U D D U	U D D U
blue grama	U D P D	D P P D	U D P U	D P P D	D P P D	U D P U	U D P U
foxtail barley	U D N N	N P N N	U D N N	N P N N	N P N N	U D N N	U D N N
inland saltgrass	N U U N	N N N N	N U U N	N N N N	N N N N	N U U N	N U U N
little bluestem	U D D U	U U D U	U D D U	N D N N	N D N N	U D D U	U D D U
plains bluegrass	U D U D	N D N U	U D U D	U P N D	U P N D	U D U D	U D U D
sand dropseed	N U N N	N U N N	N U N N	N U N N	N U N N	N U N N	N U N N
slender wheatgrass	U P U U	U D U U	U P U U	N D U N	N D U N	U P U U	U P U U
switchgrass	U D D U	U D U U	U D D U	N N N N	N N N N	U D D U	U D D U
western wheatgrass	U P D D	U D U U	U P D U	N D N N	N D N N	U P D U	U P D U
Grass-likes							
Baltic rush	N N N N	N N N N	N N N N	N N N N	N N N N	N N N N	N N N N
bulrush	U U U U	N N N N	U U U U	N N N N	N N N N	U U U U	U U U U
rush	N N N N	N N N N	N N N N	N N N N	N N N N	N N N N	N N N N
sedge	U P U D	U P U D	U D U D	U D U D	U D U D	U D U D	U D U D
spikerush	U U U U	U U U U	U U U U	U U U U	U U U U	U U U U	U U U U
Forbs							
arrowgrass	T T T T	T T T T	T T T T	T T T T	T T T T	T T T T	T T T T
cudweed sagewort	U U U U	U U D U	U U U U	U U D U	U U D U	U U U U	U U D U
heath aster	U U D U	U U P U	U U D U	U U P U	U U P U	U U D U	U U P U
milkvetch	U U U U	U D U U	U U U U	U D U U	U D U U	U U U U	U D U U
prairie gentian	U U U U	N U U N	U U U U	N U U N	N U U N	U U U U	N U U N
Pursh seepweed	U U U U	U U U U	U U U U	U U U U	U U U U	U U U U	U U U U
scouringrush	T T T T	T T T T	T T T T	T T T T	T T T T	T T T T	T T T T
western ragweed	U U U U	U U U U	U U U U	N N N N	N N N N	U U U U	N N N N

N = not used; **U** = undesirable; **D** = desirable; **P** = preferred; **T** = toxic
† Quarters: 1 – Jan., Feb., Mar.; 2 – Apr., May, Jun.; 3 – Jul., Aug., Sep.; 4 – Oct., Nov., Dec.

Animal Community – Grazing Interpretations

The following table lists annual, suggested initial stocking rates with average growing conditions. These are conservative estimates that should be used only as guidelines in the initial stages of conservation planning. Often, the current plant composition does not entirely match any particular plant community (as described in this Ecological Site Description). Because of this, a resource inventory is necessary to document plant composition and production. More accurate carrying capacity estimates should eventually be calculated using the following stocking rate information along with animal preference data and actual stocking records, particularly when grazers other than cattle are involved. With consultation of the land manager, more intensive grazing management may result in improved harvest efficiencies and increased carrying capacity.

Plant Community	Average Annual Production (lbs./acre, air-dry)	Stocking Rate* (AUM/acre)
Alkali Sacaton	2,800	0.89
Inland Saltgrass/Alkali Sacaton	1,700	0.54
Inland Saltgrass Sod	1,000	0.32
Low Plant Density, Excessive Litter	1,900	0.60

*Based on 790 lbs./acre (air-dry weight) per Animal Unit Month (AUM), and on 25 percent harvest efficiency (refer to USDA NRCS, National Range and Pasture Handbook).

Grazing by domestic livestock is one of the major income-producing industries in the area. Rangeland in this area may provide yearlong forage. During the dormant period, the forage for livestock will likely be lacking protein to meet livestock requirements, and added protein will allow ruminants to better utilize the energy stored in grazed plant materials. A forage quality test (either directly or through fecal sampling) should be used to determine the level of supplementation needed.

Hydrology Functions

Water is the principal factor limiting herbage production on this site. The site is dominated by soils in hydrologic groups C and D. High water tables provide subirrigation of salt tolerant vegetation. Surrounding upland areas tend to have permeable soils and surface inflow peaks on these sites are often muted. These sites do not flood or are flooded only occasionally for brief periods. In many cases, areas with greater than 75 percent ground cover have the greatest potential for high infiltration and lower runoff. An exception would be where shortgrasses form a dense sod and dominate the site. Normally, areas where ground cover is less than 50 percent have the greatest potential to have reduced infiltration and higher runoff (refer to Section 4, NRCS National Engineering Handbook, for runoff quantities and hydrologic curves).

Recreational Uses

This site provides hunting opportunities for upland game species. The wide varieties of plants which bloom from spring until fall have an esthetic value that appeals to visitors.

Wood Products

Other Products

Seed harvest of native plant species can provide additional income on this site.

Supporting Information

Associated Sites

(060AY002SD) – Wet Land
(060AY003SD) – Subirrigated

Similar Sites

(060AY003SD) – Subirrigated
[more big bluestem and Indiangrass; higher production]

Inventory Data References

Information presented here has been derived from NRCS clipping data and other inventory data. Field observations from range trained personnel were also used. Those involved in developing this site description include: Stan Boltz, Range Management Specialist (RMS), NRCS; Jill Epley, RMS, NRCS; and Cheryl Nielsen, RMS, NRCS.

Data Source	Number of Records	Sample Period	State	County
SCS-RANGE-417				

State Correlation

This site has been correlated between Montana (MT), Nebraska (NE), SD, and WY in MLRA 60A.

Field Offices

Belle Fourche, SD	Custer, SD	Hot Springs, SD	Pine Ridge, SD	Sundance, WY
Broadus, MT	Ekalaka, MT	Lusk, WY	Rapid City, SD	Wall, SD
Buffalo, SD	Faith, SD	Martin, SD	Rushville, NE	
Chadron, NE	Gillette, WY	Newcastle, WY	Sturgis, SD	

Relationship to Other Established Classifications

Level IV Ecoregions of the Conterminous United States: 43e – Sagebrush Steppe, 43g – Semi-arid Pierre Shale Plains, and 43k – Dense Clay Prairie.

Other References

High Plains Regional Climate Center, University of Nebraska, 830728 Chase Hall, Lincoln, NE 68583-0728. (http://www.hprcc.unl.edu/)

USDA, NRCS. National Water and Climate Center, 101 SW Main, Suite 1600, Portland, OR 97204-3224. (http://www.wcc.nrcs.usda.gov/)

USDA, NRCS. National Range and Pasture Handbook, September 1997.

USDA, NRCS. National Soil Information System, Information Technology Center, 2150 Centre Avenue, Building A, Fort Collins, CO 80526. (http://soils.usda.gov/technical/nasis)

USDA, NRCS, 2002. National Soil Survey Handbook, Title 430-VI. (http://soils.usda.gov/technical/handbook/)

USDA, NRCS. 2001. The PLANTS Database, Version 3.1 (http://plants.usda.gov). National Plant Data Center, Baton Rouge, LA 70874-4490 USA.

USDA, NRCS, Various Published Soil Surveys.

Site Description Approval

MT, State Range Management Specialist	Date	NE, State Range Management Specialist	Date
SD, State Range Management Specialist	Date	WY, State Range Management Specialist	Date