United States Department of Agriculture
Natural Resources Conservation Service

Ecological Site Description

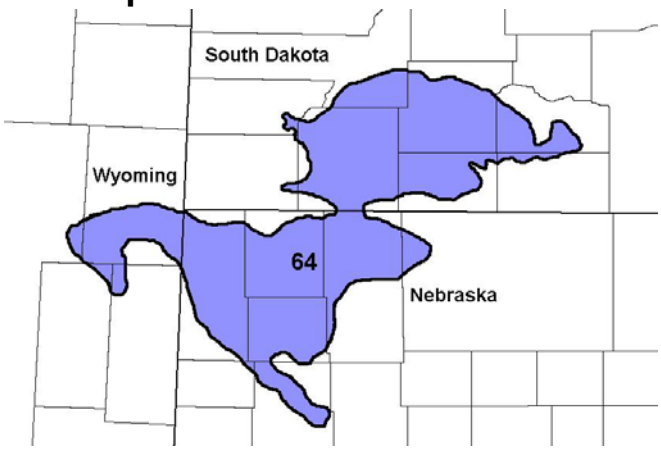

Site Type: Rangeland

Site Name: Wet Subirrigated

Site ID: R064XY002NE

Major Land Resource Area (MLRA): 64 – Mixed Sandy and Silty Tableland

Physiographic Features

This site occurs on nearly level to gently sloping floodplains.

Landform: floodplain **Aspect:** N/A

	Minimum	Maximum
Elevation (feet):	2,900	4,000
Slope (percent):	0	2
Water Table Depth (inches):	0	18
Flooding:		
Frequency:	Rare	Frequent
Duration:	Very brief	Brief
Ponding:		
Depth (inches):	None	None
Frequency:	None	None
Duration:	None	None
Runoff Class:	Negligible	Low

Climatic Features

MLRA 64 is considered to have a continental climate – cold winters and hot summers, low humidity, light rainfall, and much sunshine. Extremes in temperature may also abound. The climate is the result of this MLRA's location near the geographic center of North America. There are few natural barriers on the Northern Great Plains and air masses move freely across the plains and account for rapid changes in temperature.

Annual precipitation ranges from 14 to 20 inches per year. The normal average annual temperature is about 47°F. January is the coldest month with average temperatures ranging from about 21°F (Wood, South Dakota (SD)), to about 25°F (Hemingford, Nebraska (NE)). July is the warmest month with temperatures averaging from about 70°F (Keeline 3 W, Wyoming (WY)), to about 76°F (Wood, SD). The range of normal average monthly temperatures between the coldest and warmest months is about 55°F. This large annual range attests to the continental nature of this area's climate. Hourly winds average about 11 miles per hour (mph) annually, ranging from about 13 mph during the spring to about 10 mph during the summer. Daytime winds are generally stronger than nighttime and occasional strong storms may bring brief periods of high winds with gusts to more than 50 mph.

Growth of cool-season plants begins in early to mid March, slowing or ceasing in late June. Warm-season plants begin growth about mid-May and continue to early or mid-September. Greenup of cool-season plants may occur in September and October when adequate soil moisture is present.

	Minimum	Maximum
Frost-free period (days):	115	143
Freeze-free period (days):	137	163
Mean Annual Precipitation (inches):	14	20

Average Monthly Precipitation (inches) and Temperature (°F):

	Precip. Min.	Precip. Max	Temp. Min.	Temp. Max.
January	0.42	0.52	9.0	35.8
February	0.48	0.61	14.6	40.7
March	0.90	1.22	21.0	47.5
April	1.83	2.15	28.9	61.3
May	2.22	3.38	38.3	72.2
June	2.05	3.27	47.3	82.1
July	1.63	2.73	53.9	90.1
August	1.09	1.96	52.3	89.3
September	1.09	1.58	42.4	79.5
October	0.80	1.38	32.6	66.6
November	0.56	0.65	20.4	49.0
December	0.42	0.50	13.4	38.4

Climate Stations		Period	
Station ID	**Location or Name**	**From**	**To**
NE3755	Hemingford, NE	1964	1999
WY5085	Keeline 3 W, WY	1953	1986
SD9442	Wood, SD	1948	1999

For local climate stations that may be more representative, refer to http://www.wcc.nrcs.usda.gov.

Riparian and Wetland Features

This ecological site (ES) has a combination of physical and hydrological features that: 1) provide season-long ground water within 3.5 feet of the surface, 2) allows relatively free movement of water and air in the upper part of the soil, and 3) are rarely to frequently flooded.

Wetland Description:	System	Subsystem	Class	Subclass
Cowardin, et al., 1979	Palustrine	N/A	Emergent Wetland	Persistent

Representative Soil Features

The features common to soils in this site are the fine sand and loam textured surface layers and slopes of zero to two percent. The soils in this site are poorly drained and formed in eolian sands and sandy alluvium. The surface layer is 5 to 10 inches thick. The subsurface texture ranges from very fine sandy loam to silt loam. Rills and gullies should not typically be present. Water flow patterns should be barely distinguishable if at all present. Litter typically falls in place and signs of movement are not common. Chemical and physical crusts are rare to non-existent.

More information can be found in the various soil survey reports. Contact the local United States Department of Agriculture (USDA) Service Center for soil survey reports that include more detail specific to your location.

Parent Material Kind: alluvium
Parent Material Origin: mixed
Surface Texture: loam, fine sand
Surface Texture Modifier: none
Subsurface Texture Group: loamy
Surface Fragments ≤3" (% Cover): 0
Surface Fragments >3" (%Cover): 0
Subsurface Fragments ≤3" (% Volume): 0-5
Subsurface Fragments >3" (% Volume): 0

	Minimum	Maximum
Drainage Class:	poorly	poorly
Permeability Class:	moderate	moderate
Depth (inches):	>80	>80
Electrical Conductivity (mmhos/cm)*:	0	2
Sodium Absorption Ratio*:	0	6
Soil Reaction (1:1 Water)*:	6.6	8.4
Soil Reaction (0.1M CaCl2)*:	NA	NA
Available Water Capacity (inches)*:	6	8
Calcium Carbonate Equivalent (percent)*:	0	10

*These attributes represent 0-40 inches in depth or to the first restrictive layer.

Plant Communities

Ecological Dynamics of the Site
This site developed under Northern Great Plains climatic conditions, light to severe grazing by bison and other large herbivores, sporadic natural or man-caused wildfire (often of light intensities), and other biotic and abiotic factors that typically influence soil/site development. Changes will occur in the plant communities due to short-term weather variations, impacts of native and/or exotic plant and animal species, and management actions. While the following plant community descriptions describe more typical transitions between communities that will occur, severe disturbances, such as periods of well below average precipitation, can cause significant shifts in plant communities and/or species composition.

Continuous season-long grazing (during the typical growing season of May through October) and/or repeated seasonal grazing (e.g., every spring, every summer) without adequate recovery periods following each grazing occurrence causes this site to depart from the Big Bluestem/Switchgrass Plant Community. Species such as switchgrass, slender wheatgrass, Scribner panicum, western wheatgrass, foxtail barley, and prairie cordgrass will increase. Warm-season grasses such as big bluestem and Indiangrass will decrease in frequency and production.

Interpretations are primarily based on the Big Bluestem/Switchgrass Plant Community. It has been determined by study of rangeland relic areas, areas protected from excessive disturbance, and areas under long-term rotational grazing regimes. Trends in plant community dynamics ranging from heavily grazed to lightly grazed areas, seasonal use pastures, and historical accounts also have been used. Plant communities, states, transitional pathways, and thresholds have been determined through similar studies and experience.

The following is a diagram that illustrates the common plant communities that can occur on the site and the transition pathways between communities. The ecological processes will be discussed in more detail in the plant community descriptions following the diagram.

Plant Communities and Transitional Pathways

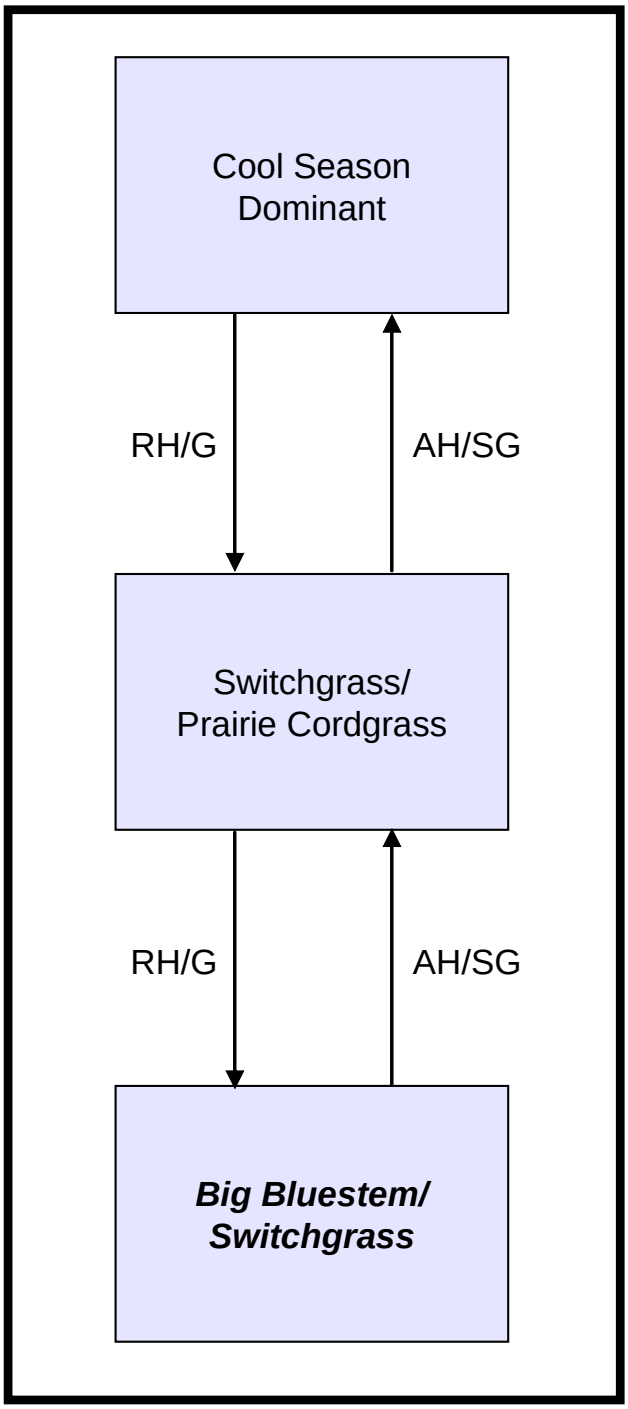

AH/SG - Annual haying/summer grazing
RH/G - Rotational haying/grazing

Plant Community Composition and Group Annual Production

		Big Bluestem/Switchgrass			Switchgrass/Prairie Cordgrass			Cool Season Dominant		
COMMON/GROUP NAME	**SYMBOL**	**Grp**	**lbs./acre**	**% Comp**	**Grp**	**lbs./acre**	**% Comp**	**Grp**	**lbs./acre**	**% Comp**
GRASSES & GRASS-LIKES			*4000 - 4750*	*80 - 95*		*3600 - 4275*	*80 - 95*		*2960 - 3515*	*80 - 95*
WARM-SEASON GRASSES		**1**	**2000 - 3750**	**40 - 75**	**1**	**1800 - 2700**	**40 - 60**	**1**	**740 - 1665**	**20 - 45**
big bluestem	ANGE	1	750 - 1500	15 - 30	1	450 - 900	10 - 20	1	0 - 555	0 - 15
prairie cordgrass	SPPE	1	750 - 1500	15 - 30	1	900 - 1800	20 - 40	1	555 - 1295	15 - 35
switchgrass	PAVI2	1	750 - 1250	15 - 25	1	900 - 1800	20 - 40	1	185 - 555	5 - 15
Indiangrass	SONU2	1	250 - 750	5 - 15	1	0 - 225	0 - 5	1	0 - 185	0 - 5
green muhly	MURA	1	0 - 250	0 - 5	1	0 - 225	0 - 5	1	0 - 74	0 - 2
COOL-SEASON GRASSES		**2**	**500 - 1500**	**10 - 30**	**2**	**450 - 1350**	**10 - 30**	**2**	**1110 - 2775**	**30 - 75**
bluejoint reedgrass	CACA4	2	250 - 500	5 - 10	2	225 - 450	5 - 10	2	370 - 925	10 - 25
northern reedgrass	CASTI3	2	250 - 500	5 - 10	2	225 - 450	5 - 10	2	370 - 925	10 - 25
plains bluegrass	POAR3	2	250 - 500	5 - 10	2	225 - 450	5 - 10	2	370 - 925	10 - 25
slender wheatgrass	ELTRT	2	100 - 500	2 - 10	2	90 - 450	2 - 10	2	74 - 555	2 - 15
western wheatgrass	PASM	2	0 - 250	0 - 5	2	0 - 450	0 - 10	2	0 - 370	0 - 10
foxtail barley	HOJU	2	0 - 100	0 - 2	2	0 - 135	0 - 3	2	0 - 185	0 - 5
OTHER NATIVE GRASSES		**3**	**0 - 250**	**0 - 5**	**3**	**0 - 225**	**0 - 5**	**3**	**0 - 185**	**0 - 5**
other perennial grasses	2GP	3	0 - 250	0 - 5	3	0 - 225	0 - 5	3	0 - 185	0 - 5
GRASS-LIKES		**4**	**250 - 500**	**5 - 10**	**4**	**225 - 675**	**5 - 15**	**4**	**185 - 740**	**5 - 20**
sedge	CAREX	4	50 - 500	1 - 10	4	45 - 450	1 - 10	4	74 - 555	2 - 15
rush	JUNCU	4	0 - 250	0 - 5	4	0 - 225	0 - 5	4	37 - 185	1 - 5
bulrush	SCHOE6	4	0 - 250	0 - 5	4	0 - 225	0 - 5	4	0 - 185	0 - 5
spikerush	ELEOC	4	0 - 150	0 - 3	4	0 - 135	0 - 3	4	0 - 185	0 - 5
NON-NATIVE GRASSES		**5**			**5**	**0 - 225**	**0 - 5**	**5**	**0 - 555**	**0 - 15**
reed canarygrass	PHAR3				5	0 - 225	0 - 5	5	0 - 555	0 - 15
FORBS		*6*	*0 - 250*	*0 - 5*	*6*	*0 - 225*	*0 - 5*	*6*	*0 - 185*	*0 - 5*
American licorice	GLLE3	6	0 - 50	0 - 1	6	0 - 45	0 - 1	6	0 - 37	0 - 1
black-eyed Susan	RUHI2	6	0 - 50	0 - 1	6	0 - 90	0 - 2	6	0 - 74	0 - 2
cinquefoil	POTEN	6	0 - 50	0 - 1	6	0 - 45	0 - 1	6	0 - 37	0 - 1
goldenrod	SOLID	6	0 - 50	0 - 1	6	0 - 45	0 - 1	6	0 - 37	0 - 1
heath aster	SYER	6	0 - 50	0 - 1	6	0 - 90	0 - 2	6	0 - 111	0 - 3
ironweed	VERNO	6	0 - 50	0 - 1	6	0 - 90	0 - 2	6	0 - 111	0 - 3
Pennsylvania smartweed	POPE2	6	0 - 50	0 - 1	6	0 - 90	0 - 2	6	0 - 74	0 - 2
scouringrush	EQHY	6	0 - 50	0 - 1	6	0 - 45	0 - 1	6	0 - 37	0 - 1
western ragweed	AMPS	6	0 - 50	0 - 1	6	0 - 90	0 - 2	6	0 - 74	0 - 2
other perennial forbs	2FP	6	0 - 100	0 - 2	6	0 - 90	0 - 2	6	0 - 74	0 - 2
NON-NATIVE FORBS		**7**			**7**			**7**	**0 - 185**	**0 - 5**
red clover	TRPR2							7	0 - 185	0 - 5
white clover	TRRE3							7	0 - 74	0 - 2

Annual Production lbs./acre	LOW RV HIGH	LOW RV HIGH	LOW RV HIGH
GRASSES & GRASS-LIKES	4500 - 4875 - 5225	4000 - 4388 - 4770	3300 - 3608 - 3910
FORBS	0 - 125 - 275	0 - 113 - 230	0 - 93 - 190
TOTAL	4500 - 5000 - 5500	4000 - 4500 - 5000	3300 - 3700 - 4100

This list of plants and their relative proportions are based on near normal years. Fluctuations in species composition and relative production may change from year to year dependent upon precipitation or other climatic factors. RV = Relative value. Refer to PLANTS database for scientific names and codes: http://plants.usda.gov

Plant Community and Vegetation State Narratives

Following are the narratives for each of the described plant communities. These plant communities may not represent every possibility but they are the most prevalent and repeatable plant communities. The plant composition tables shown above have been developed from the best available knowledge at the time of this revision. As more data is collected, some of these plant communities may be revised or removed and new ones may be added. None of these plant communities should necessarily be thought of as “Desired Plant Communities” (DPC). According to the USDA Natural Resources Conservation Service (NRCS) National Range and Pasture Handbook, DPCs will be determined by the decision makers and will meet minimum quality criteria established by the NRCS. The main purpose for including any description of a plant community here is to capture the current knowledge and experience at the time of this revision.

Big Bluestem/Switchgrass Plant Community

Interpretations are primarily based on the Big Bluestem/Switchgrass Plant Community (this is also considered climax). This plant community can be found on areas that are properly managed with grazing and/or prescribed burning. Harvesting hay at a different time during the growing season each year allows this plant community to persist. The potential vegetation is about 85 percent grasses, 10

percent grass-like plants, and 5 percent forbs. Tall, warm-season grasses dominate the plant community.

The major grasses include big bluestem, Indiangrass, switchgrass, bluejoint reedgrass, northern reedgrass, and prairie cordgrass. Other grasses occurring on this plant community include slender wheatgrass, plains bluegrass, and western wheatgrass.

This plant community is extremely resilient and well adapted to the Northern Great Plains climatic conditions. The diversity in plant species allows for high drought tolerance. This is a healthy and sustainable plant community (site/soil stability, watershed function, and biologic integrity).

The following growth curve shows the estimated monthly percentages of total annual growth of the dominant species expected during an average year:
Growth curve number: NE6409
Growth curve name: Pine Ridge/Badlands, warm-season dominant, cool-season subdominant.
Growth curve description: Warm-season dominant, cool-season subdominant, lowland.

JAN	FEB	MAR	APR	MAY	JUN	JUL	AUG	SEP	OCT	NOV	DEC
0	0	3	8	18	27	23	12	6	3	0	0

Transitional pathways and/or community pathways leading to other plant communities are as follows:

- Annual haying or summer grazing will shift this plant community to the *Switchgrass/Prairie Cordgrass Plant Community*. Haying or grazing at set times during the growing season can reduce plant diversity and reduce the vigor of desirable grasses.

Switchgrass/Prairie Cordgrass Plant Community

Historically, this plant community evolved under annual haying or moderate summer grazing followed by heavy grazing in the fall. The potential vegetation is about 80 percent grasses, 15 percent grass-like plants, and 5 percent forbs. Dominant grasses include switchgrass, prairie cordgrass, big bluestem, and forbs such as smartweed and ironweed.

When compared to the Big Bluestem/Switchgrass Plant Community, switchgrass and prairie cordgrass have increased while big bluestem and Indiangrass have decreased. Plant diversity has decreased with the desirable, more palatable, grasses being suppressed due to heavier use.

This plant community is somewhat resistant to change. The herbaceous species present are well adapted to grazing; however, species composition can be altered through long-term overgrazing. If the herbaceous component is intact, it tends to be resilient if the disturbance is not long-term.

The following growth curve shows the estimated monthly percentages of total annual growth of the dominant species expected during an average year:
Growth curve number: NE6410
Growth curve name: Pine Ridge/Badlands, lowland warm-season dominant.
Growth curve description: Warm-season dominant, lowland.

JAN	FEB	MAR	APR	MAY	JUN	JUL	AUG	SEP	OCT	NOV	DEC
0	0	3	7	15	25	25	17	6	2	0	0

Transitional pathways and/or community pathways leading to other plant communities are as follows:

- Timely haying and/or rotational grazing will shift this plant community back to the *Big Bluestem/Switchgrass Plant Community*. Haying or grazing prior to the onset of active warm-season grass growth will improve warm season grass vigor. This early haying also reduces

cool season grass competition, and improves the quality of the hay. Waiting to graze after a killing frost in the fall will also help to reduce the cool season grasses, while improving the vigor of the warm season grasses.

- Repeated annual mid summer haying or grazing will shift this plant community to the *Cool Season Dominant Plant Community*.

Cool-Season Dominant Plant Community

Historically, this plant community evolved under long-term annual haying in the mid-summer. Cool-season grasses make up a majority of the plant community with the balance made up of warm-season grasses and miscellaneous forbs. The potential vegetation is about 70 percent grasses, 20 percent grass-like plants, and 10 percent forbs. Dominant grasses include bluejoint and northern reedgrass which are acceptable grasses on this plant community. The reedgrasses become aggressive and increase, crowding out the warm-season plants of big bluestem, Indiangrass, and switchgrass. Grasses of secondary importance include prairie cordgrass, slender wheatgrass, and western wheatgrass. Forbs commonly found in this plant community include red and white clover.

When compared to the Big Bluestem/Switchgrass Plant Community, bluejoint and northern reedgrass, slender wheatgrass, and prairie cordgrass have increased. Big bluestem and Indiangrass have decreased.

This plant community is moderately resistant to change. The herbaceous species present are well adapted to grazing; however, species composition can be altered through long-term overgrazing. If the herbaceous component is intact, it tends to be resilient if the disturbance is not long-term.

The following growth curve shows the estimated monthly percentages of total annual growth of the dominant species expected during an average year:
Growth curve number: NE6406
Growth curve name: Pine Ridge/Badlands, lowland cool-season dominant.
Growth curve description: Cool-season dominant, lowland.

JAN	FEB	MAR	APR	MAY	JUN	JUL	AUG	SEP	OCT	NOV	DEC
0	0	5	13	28	28	12	5	6	3	0	0

Transitional pathways and/or community pathways leading to other plant communities are as follows:

- Timely haying and/or rotational grazing will shift this plant community back to the *Switchgrass/Prairie Cordgrass Plant Community*. Haying or grazing prior to the onset of active warm-season grass growth will improve plant vigor. This early haying also reduces cool-season grass competition and improves the quality of the hay. Grazing after a killing frost in the fall will also help to reduce cool-season grasses.

Ecological Site Interpretations

Animal Community – Wildlife Interpretations

MLRA 64 lies within the drier portion of northern mixed-grass prairie ecosystem where sagebrush steppes to the west yield to grassland steppes to the east. Prior to European settlement, this area consisted of diverse grass/shrub land habitats interspersed with varying densities of depressional, instream wetlands, and woody riparian corridors. These habitats provided critical life cycle components for many of its users. Many species of grassland birds, small mammals, reptiles, amphibians, and herds of roaming bison, elk, and pronghorn were among the inhabitants adapted to this semi-arid region. Roaming herbivores, as well as, several small mammal and insect species, were the primary consumers linking the grassland resources to predators such as the wolf, mountain

lion, and grizzly bear, as well as, smaller carnivores such as the coyote, bobcat, fox, and raptors. The prairie dog was once abundant; however, the species remains a keystone species within its range. The black-footed ferret, burrowing owl, ferruginous hawk, mountain plover, and swift fox were associated with prairie dog complexes.

Historically, the northern mixed-grass prairie was a disturbance-driven ecosystem with fire, herbivory, and climate functioning as the primary disturbance factors either singly or in combination. Following European settlement, livestock grazing, cropland conversion, elimination of fire, energy development, and other anthropogenic factors influenced species composition and abundance. Introduced and invasive species further impacted plant and animal communities. The bison was a historical keystone species but have been extirpated as a free-ranging herbivore. The loss of the bison and reduction of prairie dog populations and fire as ecological drivers greatly influenced the character of the remaining native plant communities and altered wildlife habitats. Human development has reduced habitat quality for area-sensitive species.

Within MLRA 64, the Wet Subirrigated ES provides upland grassland cover with an associated forb, shrub, and tree component. It was typically part of a an expansive grassland landscape that included combinations of Badlands, Thin Breaks, Clayey, Claypan, Dense Clay, Loamy, Saline, Sandy, Shallow, Overflow, and Terrace ESs. This site provided habitat for species requiring unfragmented grassland. Important habitat features and components found commonly or exclusively on this site may include sharp-tailed grouse leks; upland nesting habitat for grassland birds, forbs and insects for brood habitat; and a forage source for small and large herbivores. Many grassland and shrub steppe nesting bird populations are declining. Extirpated species include free-ranging American bison, grizzly bear, gray wolf, black-footed ferret, mountain plover, Rocky Mountain locust, and swift fox.

The Wet Subirrigated ES has remained relatively intact but may be subject to haying under drier conditions. This site receives surface and subsurface water from adjacent subirrigated sites during precipitation events. The site provides important wet meadow type habitat for birds, small rodents, bats, mammalian predators, reptiles, amphibians, and insects. These sites may provide forage sites for sharp-tailed grouse broods.

Big Bluestem/Prairie Cordgrass (HCPC) and Switchgrass/Prairie Cordgrass: This site is dominated by big bluestem and prairie cordgrass with a shrub community generally dominated by willow species. The grass-like and forb communities may contain species likely to occur in wetlands. Raptors such as red-tailed hawk, Swainson's hawk, American kestrel, and great-horned owl may use this site. Insects, such as pollinators, play a limited role in maintaining the forb community but provide a significant forage base for birds and other species. Sharp-tailed grouse may benefit from this site. Diverse prey populations are available for grassland raptors and mammalian predators especially bobcat.

The diversity of grasses, grass-likes, and forbs provide high nutrition levels for small and large herbivores including voles, mice, spotted ground squirrel, desert cottontail, white-tailed and black-tailed jackrabbit, and deer. This ES provides excellent fawning habitat for white-tailed deer. The relatively tall stature of this plant community provides suitable thermal, protective, and escape cover for small and large mammals. Predators utilizing this plant community include coyote, American badger, red fox, and short- and long-tailed weasel. This plant community provides limited habitat for amphibians, mostly toads (i.e., Great Plains, Woodhousi's, and Plains spade-foot). Prey abundance and shade opportunities may attract multiple reptile species such as gopher snake, milk snake, and prairie rattlesnake to this site.

Resulting from annual haying and/or summer grazing switchgrass will become dominant. The shift from big bluestem to switchgrass will not significantly change the wildlife community. The forb and grass-like plant diversity and abundance remain relatively unchanged.

Cool-season Dominant Plant Community: Resulting from continued annual haying and/or summer grazing, cool-season grass species will dominate. The reduction of the mid- and tall warm-season grasses plus the invasion of reed canarygrass substantially limits wildlife forage and cover. Forb diversity and abundance remains relatively unchanged although introduced clover species may become a wildlife food source.

Animal Preferences (Quarterly – 1,2,3,4†)

Common Name	Cattle	Sheep	Horses	Deer	Antelope	Bison	Elk
Grasses							
big bluestem	U D P D	U D U U	U D P D	U D U U	U D U U	U D P D	U D P D
bluejoint reedgrass	U P D U	N D U N	U P D U	N D U N	N D U N	U P D U	U P D U
foxtail barley	U D N N	N P N N	U D N N	N P N N	N P N N	U D N N	U D N N
green muhly	U D D U	N U N N	U D D U	N U N N	N U N N	U D D U	U D D U
Indiangrass	U D P D	U D U U	U D P D	U D U U	U D U U	U D P D	U D P D
northern reedgrass	U P U D	N D N U	U P U D	N D N U	N D N U	U P U D	U P U D
plains bluegrass	U D U D	N D N U	U D U D	U P N D	U P N D	U D U D	U D U D
prairie cordgrass	U D D U	N N N N	U D D U	N N N N	N N N N	U D D U	U D D U
slender wheatgrass	U P U U	N D U N	U P U U	N D U N	N D U N	U P U U	U P U U
switchgrass	U D D U	U D U U	U D D U	N N N N	N N N N	U D D U	U D D U
western wheatgrass	U P D U	N D N N	U P D U	N D N N	N D N N	U P D U	U P D U
Grass-likes							
bulrush	U U U U	N N N N	U U U U	N N N N	N N N N	U U U U	U U U U
rush	N N N N	N N N N	N N N N	N N N N	N N N N	N N N N	N N N N
sedge	U D U D	U P N D	U D U D	U D U D	U D U D	U D U D	U D U D
spikerush	U U U U	U U U U	U U U U	U U U U	U U U U	U U U U	U U U U
Forbs							
American licorice	U U D U	N U U N	U U D U	N U U N	N U U N	U U D U	N U U N
black-eyed Susan	U U D U	N U U N	U U D U	N U U N	N U U N	U U D U	N U U N
cinquefoil	U U D U	U U U U	U U D U	U U U U	U U U U	U U D U	U U U U
goldenrod	U U D U	N U U N	U U D U	N U U N	N U U N	U U D U	N U U N
heath aster	U U D U	U U P U	U U D U	U U P U	U U P U	U U D U	U U P U
ironweed	U U U U	N N N N	U U U U	N N N N	N N N N	U U U U	N N N N
Pennsylvania smartweed	U U D U	N N N N	U U D U	N N N N	N N N N	U U D U	N N N N
scouringrush	T T T T	T T T T	T T T T	T T T T	T T T T	T T T T	T T T T
western ragweed	U U U U	N N N N	U U U U	N N N N	N N N N	U U U U	N N N N

N = not used; **U** = undesirable; **D** = desirable; **P** = preferred; **T** = toxic
†Quarters: 1 – Jan., Feb., Mar.; 2 – Apr., May, Jun.; 3 – Jul., Aug., Sep.; 4 – Oct., Nov., Dec.

Animal Community – Grazing Interpretations

The following table lists annual, suggested initial stocking rates with average growing conditions. These are conservative estimates that should be used only as guidelines in the initial stages of conservation planning. Often, the current plant composition does not entirely match any particular plant community (as described in this ES description). Because of this, a resource inventory is necessary to document plant composition and production. More accurate carrying capacity estimates should eventually be calculated using the following stocking rate information along with animal preference data and actual stocking records, particularly when grazers other than cattle are involved. With consultation of the land manager, more intensive grazing management may result in improved harvest efficiencies and increased carrying capacity.

Plant Community	Average Annual Production (lbs./acre, air-dry)	Stocking Rate* (AUM/acre)
Big Bluestem/Switchgrass	5,000	1.58
Switchgrass/Prairie Cordgrass	4,500	1.42
Cool Season Dominant	3,700	1.17

*Based on 790 lbs./acre (air-dry weight) per Animal Unit Month (AUM) and on 25 percent harvest efficiency (refer to USDA NRCS, National Range and Pasture Handbook).

Grazing by domestic livestock is one of the major income-producing industries in the area. Rangeland in this area may provide yearlong forage. During the dormant period, the forage for livestock will likely be lacking protein to meet livestock requirements and added protein will allow ruminants to better utilize the energy stored in grazed plant materials. A forage quality test (either directly or through fecal sampling) should be used to determine the level of supplementation needed.

Hydrology Functions
Moisture conditions tend to be ideal for forage production on this site. Soils on this site are in Hydrologic Soil Group C due to high water tables. Although soils are permeable, high water tables limit infiltration in wet seasons. Surrounding upland areas tend to have permeable soils and surface inflow peaks on these sites are often muted. Many areas are seasonally flooded for short periods in wet weather. Refer to Section 4, NRCS National Engineering Handbook for runoff quantities and hydrologic curves.

Recreational Uses
This site provides hunting, hiking, photography, bird watching, and other opportunities. The wide varieties of plants that bloom from spring until fall have an esthetic value that appeals to visitors.

Wood Products
No appreciable wood products are present on the site.

Other Products
Seed harvest of native plant species can provide additional income on this site.

Supporting Information

Associated Sites
(064XY024NE) – Subirrigated
(064XY022NE) – Wet Land

Similar Sites
(064XY024NE) – Subirrigated [little bluestem present; less prairie cordgrass]

Inventory Data References
Information presented here has been derived from NRCS clipping data and other inventory data. Field observations from range-trained personnel were also used. Those involved in developing this site include: Stan Boltz, Range Management Specialist (RMS), NRCS; Jill Epley, RMS, NRCS; Rick Peterson, RMS, NRCS; David Steffen, RMS, NRCS; Jeff Vander Wilt; RMS, NRCS; and Phil Young, Soil Scientist, NRCS.

Data Source	Number of Records	Sample Period	State	County
SCS-RANGE-417				

State Correlation

This site has been correlated with NE, SD, and WY in MLRA 64.

Field Offices/Counties

Alliance, NE	Box Butte	Kadoka, SD	Jackson	Rushville, NE	Sheridan
Bridgeport, NE	Morrill	Lusk, WY	Niobrara	Scottsbluff, NE	Scottsbluff
Chadron, NE	Dawes/Sioux	Martin, SD	Bennett/Shannon	Torrington, WY	Goshen
Custer, SD	Custer	Pine Ridge, SD	Pine Ridge IR	Valentine, NE	Cherry
Douglas, WY	Converse	Rapid City, SD	Pennington	Wall, SD	East Pennington
Hot Springs, SD	Fall River	Rosebud, SD	Rosebud IR	Wheatland, WY	Platte
White River, SD	Mellette/Todd				

Relationship to Other Established Classifications

Level IV Ecoregions of the Conterminous United States: 25a – Pine Ridge Escarpment, 43h – White River Badlands, and 43i – Keya Paha Tablelands.

Other References

High Plains Regional Climate Center, University of Nebraska, 830728 Chase Hall, Lincoln, NE 68583-0728. (http://www.hprcc.unl.edu/)
USDA, NRCS. National Water and Climate Center, 101 SW Main, Suite 1600, Portland, OR 97204-3224. (http://www.wcc.nrcs.usda.gov)
USDA, NRCS. National Range and Pasture Handbook, September 1997.
USDA, NRCS. National Soil Information System, Information Technology Center, 2150 Centre Avenue, Building A, Fort Collins, CO 80526. (http://soils.usda.gov/technical/nasis/)
USDA, NRCS. 2001. The PLANTS Database, Version 3.1 (http://plants.usda.gov). National Plant Data Center, Baton Rouge, LA 70874-4490 USA.
USDA, NRCS, Various Published Soil Surveys.

Site Description Approval

NE, State Range Management Specialist	Date
SD, State Range Management Specialist	Date
WY, State Range Management Specialist	Date