BUBBLE OUTLET FOR UNDERGROUND PIPE LINES

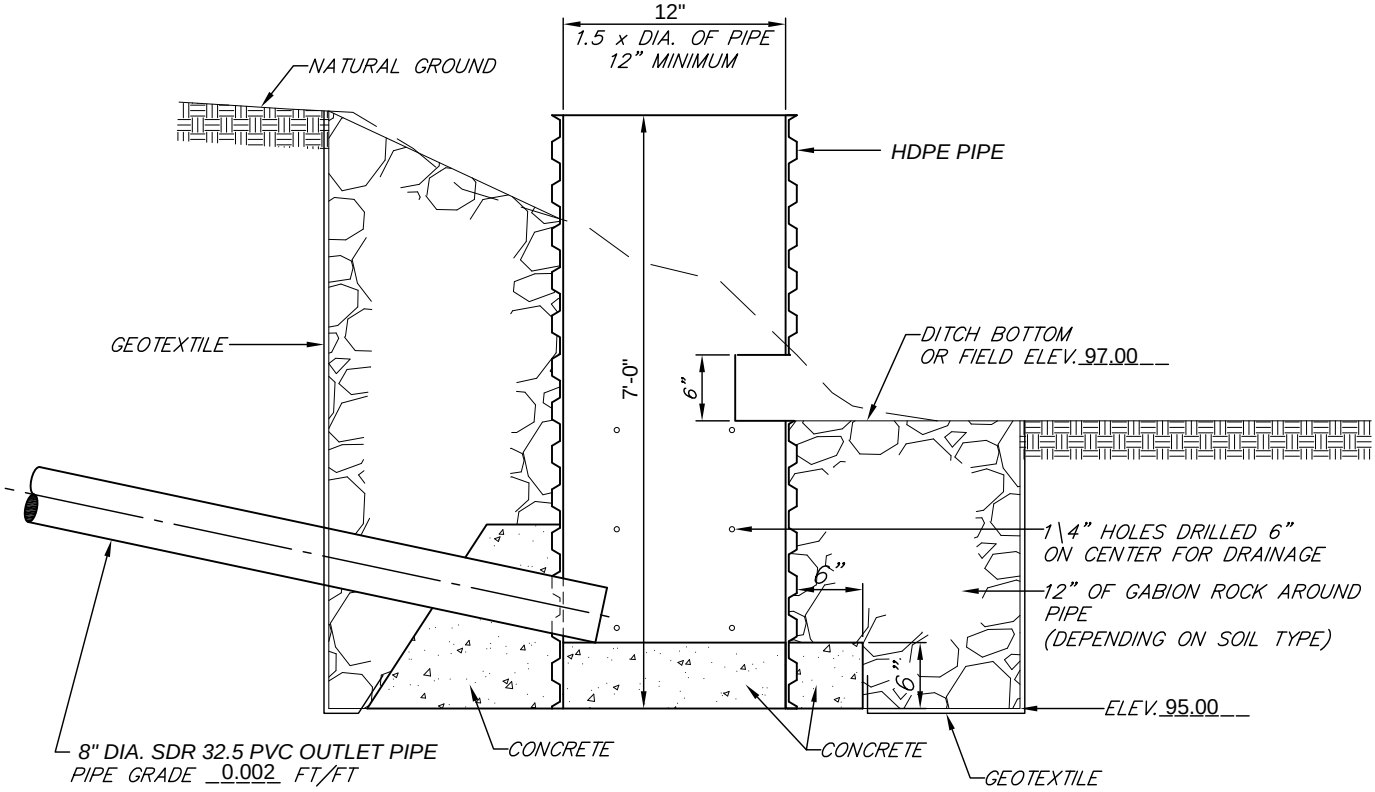

CROSS SECTION VIEW

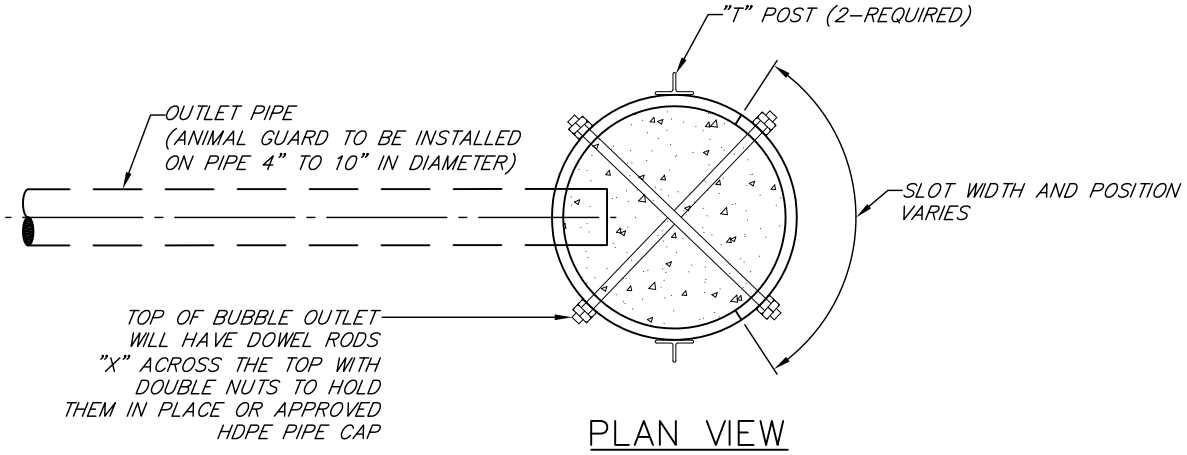

PLAN VIEW

ENGINEERING JOB CLASS IV

DRAWINGS NOT TO SCALE

NRCS
Natural Resources Conservation Service
United States Department of Agriculture

JOE SMITH FARMS
WASCOB "E"
OBION COUNTY, TENNESSEE
BUBBLE OUTLET DETAIL

		Date	
Designed	BRYAN	8/13	FILE NAME
Drawn	BRYAN	8/13	DRAWING NUMBER TN-ENG-638-1g
Checked			
Approved			Sheet 1 of 1