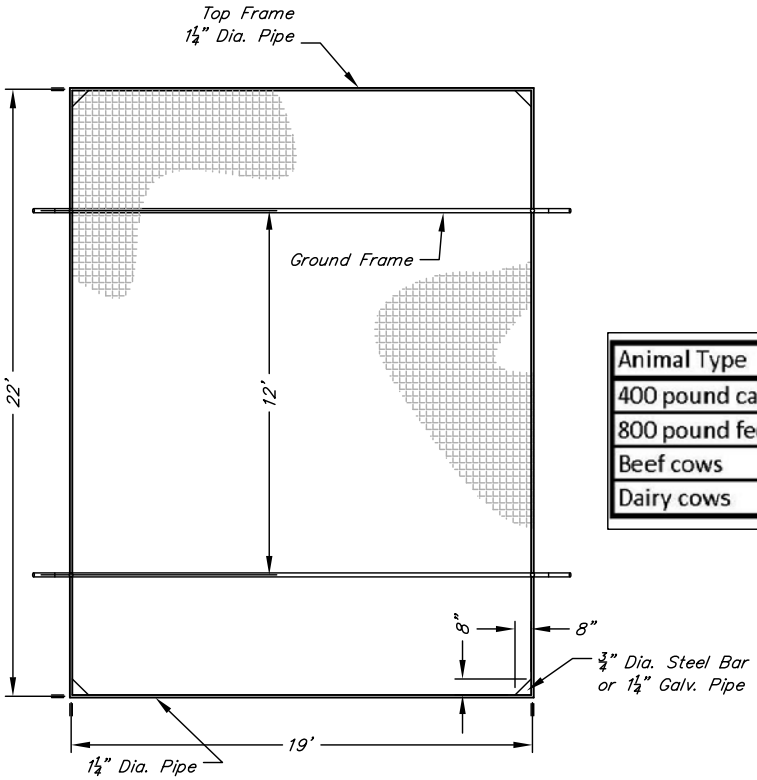

TOP VIEW

Animal Type	Number of Animals
400 pound calves	24
800 pound feeders	18
Beef cows	12
Dairy cows	9

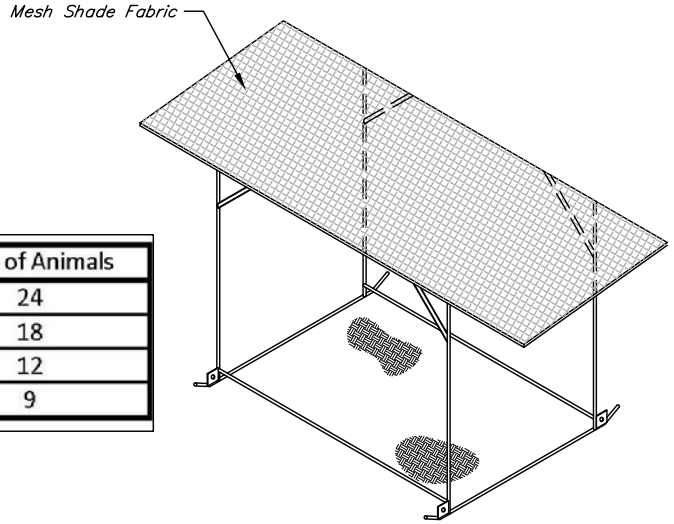

ISOMETRIC VIEW

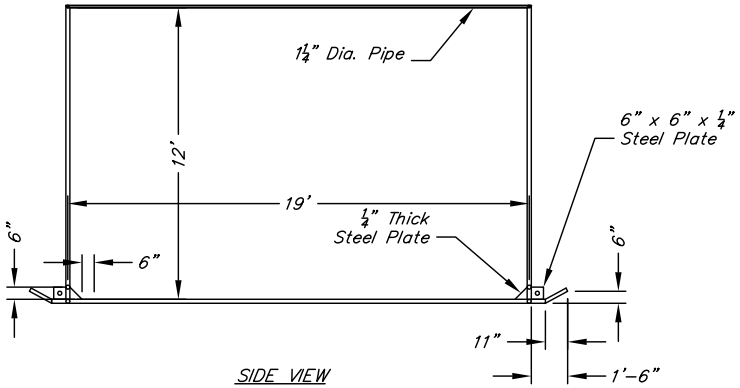

SIDE VIEW

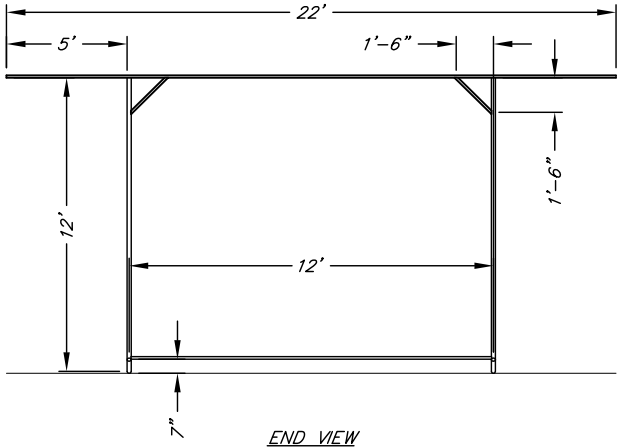

END VIEW

Date
Designed
Drawn C. DOBBS 07/12
Checked
Approved

(717) LIVESTOCK SHADE STRUCTURE 418 SQFT
TENNESSEE
DETAIL

NRCS
Natural Resources Conservation Service
United States Department of Agriculture

FILE NAME

DRAWING NUMBER

Sheet 1 of 1