SITE INVESTIGATION REQUIREMENTS

1. BORINGS SHALL BE SUFFICIENTLY DEEP AND CLOSELY SPACED TO ESTABLISH CORRELATION OF STRATA UNDER THE ENTIRE BASE OF STRUCTURE.
2. A DETERMINATION WILL BE MADE THAT MATERIALS COMPOSING THE FOUNDATION OF THE STRUCTURE WILL SUPPORT, WITHOUT DANGER OF FAILURE, RUPTURE, OR DIFFERENTIAL SETTLEMENT. THE LOADS TO BE SUPERIMPOSED.
3. GROUND WATER FEATURES, INCLUDING SPRINGS, SEEPS, OBSERVED WATER TABLE, AND DRAINAGE CHARACTERISTICS, WILL BE INCLUDED IN THE GEOLOGIC REPORT.
4. THE SUITABILITY OF EXCAVATED MATERIAL FOR USE AS BACKFILL AROUND THE STRUCTURE WILL BE STUDIED CONSIDERING THE PROPERTIES OF WORKABILITY, SHEAR STRENGTH, PERMEABILITY, AND COMPRESSIBILITY.

DESIGN REQUIREMENTS

TANK WALLS

TANK WALLS ARE DESIGNED TO SUPPORT THE FOLLOWING LOADS:

CLASS1LOADING OF 65 p.s.f./ft. EQUIVALENT FLUID PRESSURE PLUS 100 p.s.f. SURCHARGE.
(FOR USE WITH COARSE-GRAINED SOIL BACKFILL MATERIAL WITH SOME ALLOWANCE FOR WATER PRESSURES TO BE EXPECTED EVEN THOUGH WATER TABLE IS LOW AND SURFACE DRAINAGE IS PROVIDED.)

CLASS 2 LOADING OF 100 p.s.f./ft. EQUIVALENT FLUID PRESSURE PLUS 100 p.s.f. SURCHARGE.
(FOR USE WITH FINE-GRAINED SOIL BACKFILL MATERIAL.)

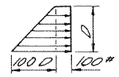

ALL WALLS ARE ADEQUATE FOR DIFFERENTIAL LOAD OF 30 p. s.f./ft. EQUIVALENT FLUID PRESSURE APPLIED FROM THE INSIDE OF THE TANK.

TANK BEAMS

TYPE A LOADING INCLUDES THE DEAD LOAD OF BEAM, ALLOWANCE OF 65 p.s.f. FOR WEIGHT OF SLAB, OR SLATTED FLOOR PLUS 150 p.s.f. LIVESTOCK TRAFFIC LOAD.

TYPE B LOADING INCLUDES THE DEAD LOAD OF BEAM, ALLOWANCE OF 75 p.s.f. FOR WEIGHT OF SLAB WITH 3' AND 4' TANK BEAM SPACING AND 100 p.s.f. FOR WEIGHT OF SLAB WITH 5' AND 6'TANK BEAM SPACING PLUS A 16,000 LB. LIVE LOAD ACTING UNIFORMLY OVER A 6' LENGTH OF BEAM LOCATED TO CREATE MAXIMUM SHEAR AND BOND, AND MAXIMUM MOMENT.

BOTTOM TANK AND EXTENDED FOOTING

A ONE-FOOT EXTENTION IS PROVIDED ON ALL STRUCTURES. MAXIMUM WATER TABLE VALUES ARE PROVIDED ON ALL STANDARD DRAWINGS CONSIDERING A FACTOR OF SAFETY OF 1.0 FOR BUOYANCY CHECK CONSIDERING THE TANK IS EMPTY, TOP IS COVERED, AND BACKFILL IS IN PLACE.

BOTTOM OF TANK IS DESIGNED FOR THIS MAXIMUM WATER TABLE VALUE OF UPLIFT AND ALSO FOR THE NO UPLIFT CONDITION.

GENERAL NOTES

1. SITES HAVING WATER TABLE CONDITIONS IN EXCESS OF WHAT IS PROVIDED ON THESE STANDARDS SHALL BE CONSIDERED SPECIAL DESIGNS. THESE SPECIAL DESIGNS MAY CONSIST OF DRAINAGE SYSTEMS AROUND THE STRUCTURE WITH PUMPS OR MODIFICATION OF THE TANK BOTTOM AND EXTENDED FOOTING DESIGN TO MEET THE ADDED BUOYANCY AND UPLIFT PRESSURES.
2. STANDARD DESIGNS DO NOT INCLUDE DETAILS ON REINFORCED CONCRETE TOP SLAB OR SLATTED COVER. INVIDUAL DESIGNS TO BE PREPARED FOR COVER BASED ON DESIRED OPERATION PROCEDURES INCLUDING FILL OPENINGS, SIZE AND TYPE OF PUMPS, AGITATORS, AND HAULING EQUIPMENT.
3. PAVED APPROACH RAMPS ARE NOT SHOWN BUT MUST BE PROVIDED AT ALL POINTS WHERE EQUIPMENT TRAVEL IS WITHIN 2' OF THE WALL.
4. TANK WALLS MAY BE USED TO SUPPORT SINGLE STORY FRAME OR STEEL TYPE BUILDINGS COMMONLY USED FOR HOUSING SWINE, POULTRY, DAIRY, ETC.

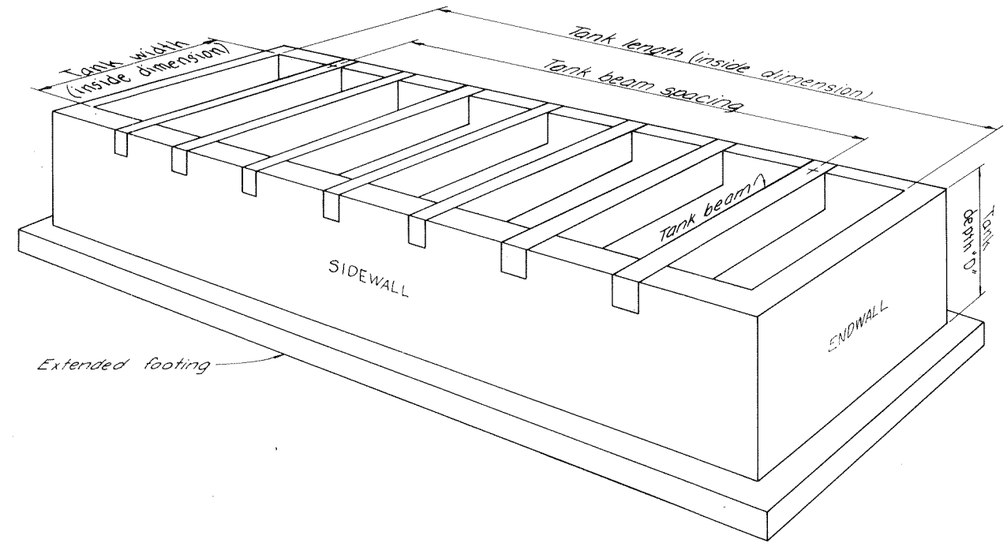

TYPICAL VIEW OF TANK
Not to scale

CONSTRUCTION AND INSPECTION REQUIREMENTS

1. THE CONTRACTOR SHALL BUILD AND MAINTAIN PROTECTIVE WORKS TO PREVENT FOREIGN WATER FROM ENTERING THE CONSTRUCTION SITE.
2. THE FOUNDATION AND OTHER PARTS OF CONSTRUCTION SHALL BE DEWATERED AS NEEDED FOR PROPER EXECUTION OF THE CONSTRUCTION WORK AND COMPLETION OF THE BACKFILL.
3. THE CONTRACTOR WILL BE RESPONSIBLE FOR THE DESIGN OF THE CONCRETE MIX AND FOR CERTIFICATION BY TESTS THAT THE STRENGTH AT 28 DAYS IS EQUAL OR GREATER THAN 3500 p.s.i. (THE MIX SHALL NOT CONTAIN LESS THAN 6 SACKS OF CEMENT PER CU. YD. AND NOT MORE THAN 6 GAL. OF WATER PER SACK OF CEMENT. AIR ENTRAINMENT SHALL RANGE FROM 5 TO 7 PERCENT. THE SLUMP RANGE SHALL BE FROM 3 TO 5 INCHES.)
4. CONCRETE SHALL BE EVENLY DISTRIBUTED IN THE FORMS AND MECHANICALLY VIBRATED TO ASSURE MAXIMUM CONSOLIDATION. CONCRETE SHALL BE PREVENTED FROM DRYING FOR A CURING PERIOD OF AT LEAST 7 DAYS AFTER IT IS PLACED. CONCRETE MAY BE COATED WITH CURING COMPOUND IN LIEU OF THE CONTINUED APPLICATION OF WATER EXCEPT AT SURFACES REQUIRING BOND WITH SUBSEQUENTLY PLACED CONCRETE.
5. TANK BEAMS MAY BE PRECAST OR CAST IN PLACE. PRECAST TANK BEAMS SHALL NOT BE INSTALLED PRIOR TO COMPLETION OF THE 7-DAY CURING PERIOD. LIFTING CABLES OR CHAINS SHALL BE LOCATED NEAR THE QUARTER POINTS AND IN THE PROCESS OF LOWERING THE TANK BEAMS IN THE WALL RECESSES ALL CLEARANCE SPACES SHALL BE FILLED WITH A PREMIXED NONSHRINK TYPE GROUT.
6. BACKFILL OPERATIONS SHOULD NOT BE STARTED UNTIL TANK BEAMS ARE INSTALLED AND NOT UNTIL AT LEAST 10 DAYS HAVE ELAPSED AFTER PLACEMENT OF THE CONCRETE. BACKFILL MATERIALS SHALL HAVE THE PROPERTIES AND MOISTURE CONTENT WHICH WILL PROVIDE MAXIMUM WORKABILITY AND UNIFORM DENSITY WITHOUT MECHANICAL HAND TAMPING. EQUIPMENT TRAVEL FOR COMPACTION OF BACKFILL WILL NOT BE USED WITHIN 2' OF THE WALL. BACKFILL IS REQUIRED ON ALL FOUR SIDES OF TANK. THE MINIMUM HEIGHT OF BACKFILL IS 2/3 OF TANK DEPTH.
7. FORMS SHALL BE MOTAR TIGHT, SUBSTANTIAL, UNYIELDING, AND CONSTRUCTED SO THAT THE FINISHED CONCRETE WILL CONFORM TO SPECIFIED DIMENSIONS. FORMS SHALL NOT BE REMOVED UNTIL AT LEAST THREE DAYS AFTER PLACEMENT OF CONCRETE. DEFECTIVE CONCRETE (e.g. HONEYCOMBS) SHALL BE REPAIRED PROMPTLY.

INDEX OF DRAWINGS

COVER SHEET WITH SPECIAL INSTRUCTIONS	SHEET 1
DETAILS OF JCT. TANK BEAM AND WALL, CONSTRUCTION JOINTS, EXPANSION JOINTS, TANK BEAM DETAILS	SHEET 2
TANK DETAILS: DEPTH - 4' TO 6': WIDTH - 4' TO 10'	SHEET 3
TANK DETAILS: DEPTH - 8' TO 12': WIDTH - 8' TO 29'	SHEET 4

DESIGN VALUES USED FOR STANDARDS

CONCRETE

f_c = 3,500 p.s.i.

f_c = 1,575 p.s.i.

v_c = 65

WITH STIRRUPS v = 295

n = 8.5

u = 500 MAX.

STEEL f_s = 20,000 p.s.i.

MIN. t&s = 0.0020 Ag

8" WALL THICKNESS WHERE ONE GRID OF STEEL IS ADEQUATE AND TWO GRIDS OF STEEL FOR ALL WALLS 10" THICK OR GREATER.

REINFORCING STEEL

	DIA. (IN.)	WT. (LB./FT.)
NO. 3 BAR	0.375	0.376
NO. 4 BAR	0.500	0.668
NO. 5 BAR	0.625	1.043
NO. 6 BAR	0.750	1.502
NO. 7 BAR	0.875	2.044
NO. 8 BAR	1.000	2.670

LAP LENGTHS EQUAL 30 BAR DIAMETERS OF SMALLER BAR UNLESS OTHERWISE NOTED.

DIMENSIONS FROM FACE OF CONCRETE TO REINFORCING BARS DESIGNATE THE CLEAR DISTANCE.

THE RADIUS OF BENDS EQUALS THREE TIMES THE DIAMETER OF THE BAR.

TENTATIVE ISSUE - SUBJECT TO REVISION

STANDARD WATERTIGHT REINFORCED CONCRETE WASTE HOLDING TANK

STANDARD DWG. NO.

DATE | SHEET 1 OF 4

U. S. DEPARTMENT OF AGRICULTURE
SOIL CONSERVATION SERVICE

	Date		
Designed		Approved by	
Drawn		Title	
Traced		Title	
Checked		Sheet No. of	Drawing No

formerly 7-E-22,180-N

4-E-30,919

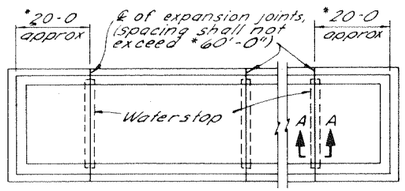

PLAN VIEW OF TANK

* Exact dimension shall be determined after beam location is selected so that joint is midway between two beams.

1. Waterstop shall be made of vinyl chloride polymer or copolymer and shall have ribbed anchor flanges and smooth web. Minimum thickness shall be 3/16". (Similar to Water Seals Inc. 6" Flextrip.)
2. Expansion Joint Filler shall be 3/4" preformed bituminous type.
3. Dowels shall consist of 3/4" dia. plain steel bars 12" long with expansion chambers for 3/4" joint closure. Coat half of bar containing chamber to prevent bond.

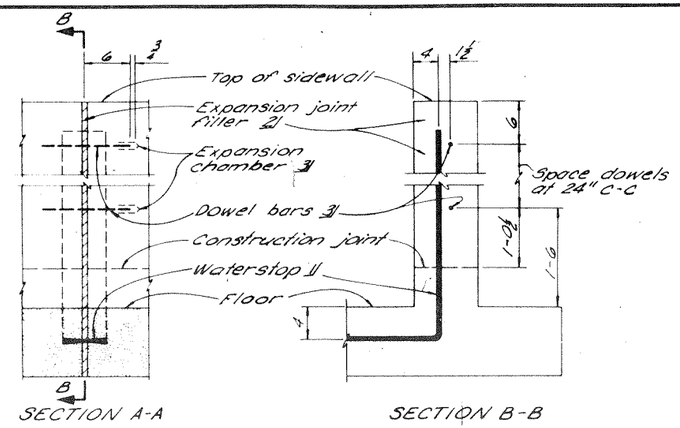

SECTION A-A

SECTION B-B

DETAILS OF EXPANSION JOINT

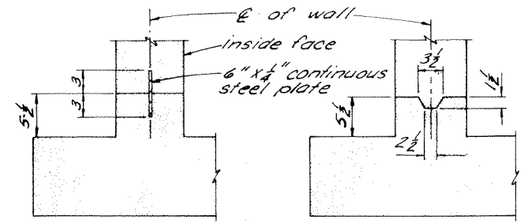

STEEL PLATE TYPE (For 10" wall)

FORM KEY TYPE (For 8" or 10" wall)

NOTE: ADDITIONAL CONSTRUCTION JOINTS SHALL BE PLACED AT LOCATIONS APPROVED BY THE ENGINEER. SURFACES OF CONSTRUCTION JOINTS SHALL BE THOROUGHLY CLEANED AND KEPT MOIST AT LEAST ONE HOUR BEFORE PLACEMENT OF NEW CONCRETE.

DETAILS OF CONSTRUCTION JOINT

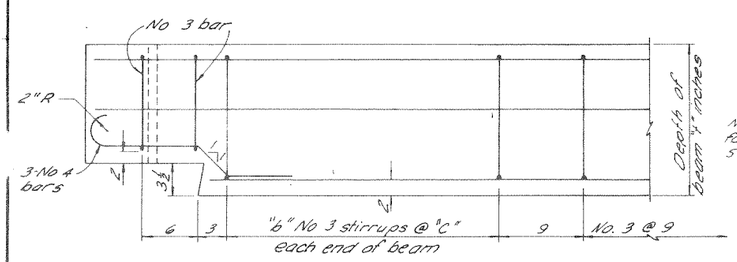

SIDE ELEVATION

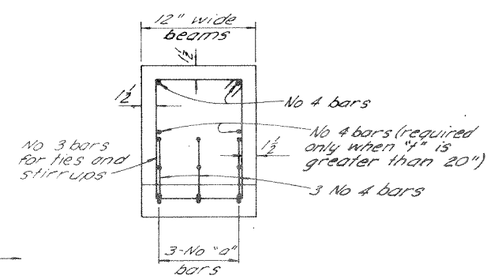

END VIEW

DETAILS OF REINFORCING IN TANK BEAMS

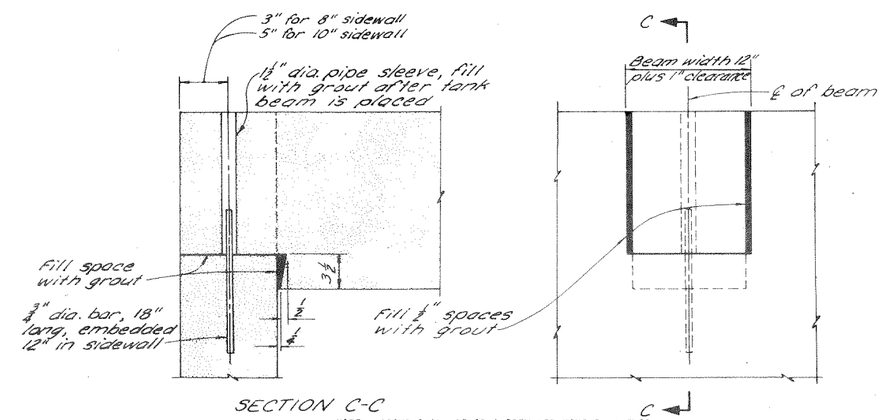

SECTION C-C

NOTE: GROUT SHALL BE OF A PREMIXED NONSHRINK TYPE.

DETAIL OF PRECAST TANK BEAM AT JUNCTION WITH SIDEWALL

TYPE A LOADING ON TANK BEAMS

Spacing of Beams - ft.	INSIDE DIMENSION OF TANK WIDTH - FT.																							
	6				8				10				12				16				20			
	Depth of Beam "f"	Size a	No. of Stirrups "b"	Spacing of Stirrups "c"	Depth of Beam "f"	Size a	No. of Stirrups "b"	Spacing of Stirrups "c"	Depth of Beam "f"	Size a	No. of Stirrups "b"	Spacing of Stirrups "c"	Depth of Beam "f"	Size a	No. of Stirrups "b"	Spacing of Stirrups "c"	Depth of Beam "f"	Size a	No. of Stirrups "b"	Spacing of Stirrups "c"	Depth of Beam "f"	Size a	No. of Stirrups "b"	Spacing of Stirrups "c"
5	14"	4	None Req'd	None Req'd	14"	4	None Req'd	None Req'd	14"	6	None Req'd	None Req'd	14"	7	5	6"	15"	8	7	6"	18"	9	9	6"
6	14"	4	None Req'd	None Req'd	14"	5	None Req'd	None Req'd	14"	6	None Req'd	None Req'd	14"	7	6	6"	16"	8	9	6"	20	10	6	9"
7	14"	4	None Req'd	None Req'd	14"	5	None Req'd	None Req'd	14"	6	6	6"	14"	8	7	6"	17"	9	9	6"	21"	10	7	9
8	14"	4	None Req'd	None Req'd	14"	5	None Req'd	None Req'd	14"	7	6	6"	14"	8	8	6"	18"	9	10	6"	22"	10	7	9"

NOTES:

1. IF TANK BEAMS ARE CAST IN PLACE, PREVENT BOND AT JUNCTION OF THE SIDEWALL AND TANK BEAM. NO GROUT IS REQUIRED.
2. NO TANK BEAMS ARE REQUIRED FOR TANK 4' DEEP × 4' WIDE.
3. TANK BEAM SPACING MUST NOT EXCEED THE MAXIMUM VALUES SHOWN IN THE TABLES TO THE LEFT. ACTUAL SPACING WILL BE DETERMINED BY THE TOP SLAB OR SLATTED COVER DESIGN.

TYPE B LOADING ON TANK BEAMS

Spacing of Beams - ft.	INSIDE DIMENSION OF TANK WIDTH - FT.																							
	6				8				10				12				16				20			
	Depth of Beam "f"	Size a	No. of Stirrups "b"	Spacing of Stirrups "c"	Depth of Beam "f"	Size a	No. of Stirrups "b"	Spacing of Stirrups "c"	Depth of Beam "f"	Size a	No. of Stirrups "b"	Spacing of Stirrups "c"	Depth of Beam "f"	Size a	No. of Stirrups "b"	Spacing of Stirrups "c"	Depth of Beam "f"	Size a	No. of Stirrups "b"	Spacing of Stirrups "c"	Depth of Beam "f"	Size a	No. of Stirrups "b"	Spacing of Stirrups "c"
3	14"	5	5	6"	15"	8	7	6"	16"	7	8	6"	16"	8	11	6"	18"	9	11	6"	21"	10	9	9"
4	14"	5	5	6"	15"	8	7	6"	16"	7	8	6"	16"	8	11	6"	19"	9	11	6"	22"	10	9	9"
5	14"	5	5	6"	15"	8	7	6"	16"	7	8	6"	16"	9	11	6"	19"	9	11	6"	23"	10	9	9"
6	14"	5	5	6"	15"	8	7	6"	16"	8	8	6"	17"	9	11	6"	20"	9	11	6"	23"	10	9	9"

TENTATIVE - SUBJECT TO REVISION

STANDARD WATERTIGHT REINFORCED CONCRETE WASTE HOLDING TANK

STANDARD DWG. NO.

DATE SHEET 2 OF 4

DETAILS OF TANK BEAMS

U. S. DEPARTMENT OF AGRICULTURE
SOIL CONSERVATION SERVICE

Designed ..... Date ..... Approved by .....
Drawn ..... Title .....
Traced ..... Title .....
Checked ..... Sheet No. ..... of ..... Drawing No.

formerly T-E-22,180-N 4-E-30,919

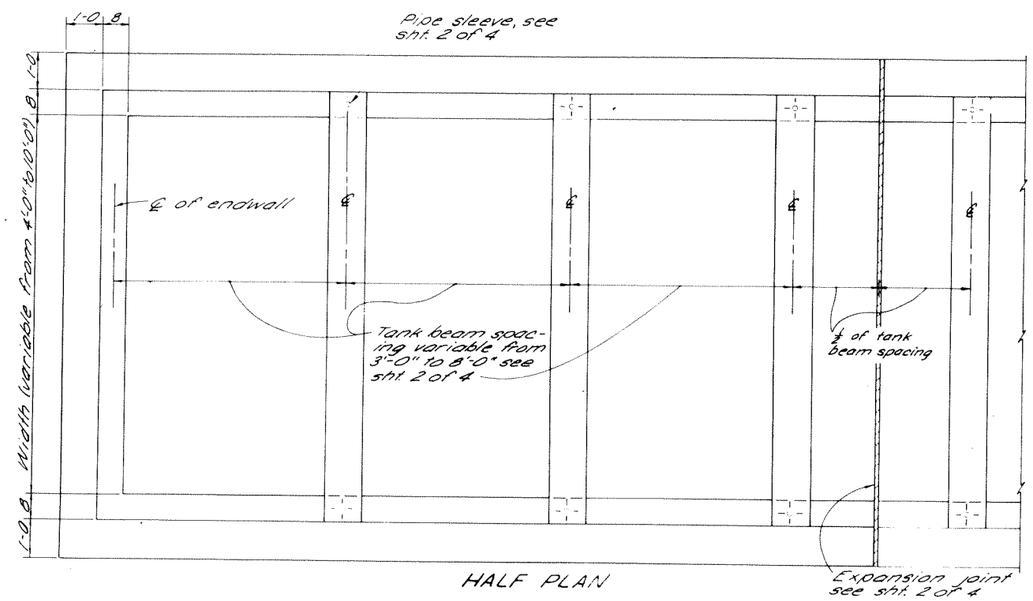

HALF PLAN

TABLE 1

Class 1 wall loading with type A or B loading on Tank Beams

Depth of Tank-Feet	Bar Designation for Size and Spacing	Inside Width of Tank-Feet			
		4	6	8	10
4	(A)	No. 4 @ 12	No. 4 @ 12	No. 4 @ 12	No. 4 @ 12
	(B)	No. 4 @ 12	No. 4 @ 12	No. 4 @ 12	No. 5 @ 14
	(C)	No. 4 @ 12	No. 4 @ 12	No. 4 @ 12	No. 5 @ 12
	* Y (Ft.)	4.7	4.7	4.7	4.7
6	(A)		No. 4 @ 12	No. 4 @ 12	No. 5 @ 12
	(B)		No. 4 @ 12	No. 5 @ 12	No. 6 @ 13
	(C)		No. 4 @ 12	No. 4 @ 10	No. 5 @ 13
	* Y (Ft.)		6.7	6.7	6.2

TABLE 2

Class 2 wall loading with type A or B loading on Tank Beams

Depth of Tank-Feet	Bar Designation for Size and Spacing	Inside Width of Tank-Feet			
		4	6	8	10
	(A)	No. 4 @ 12	No. 4 @ 12	No. 4 @ 12	No. 4 @ 12
	(B)	No. 4 @ 12	No. 4 @ 12	No. 4 @ 12	No 5 @ 14
	(C)	No. 4 @ 12	No. 4 @ 12	No. 4 @ 12	No 5 @ 12
	* Y (Ft.)	4.7	4.7	4.7	4.7
	(A)		No. 4 @ 12	No 5 @ 15	No. 5 @ 11
	(B)		No. 4 @ 12	No. 5 @ 12	No. 6 @ 13
	(C)		No. 4 @ 12	No. 5 @ 15	No. 5 @ 10
	* Y (Ft.)		6.7	6.7	6.2

* Dimension "Y" refers to the maximum water table for buoyancy check per notes on sheet 1.

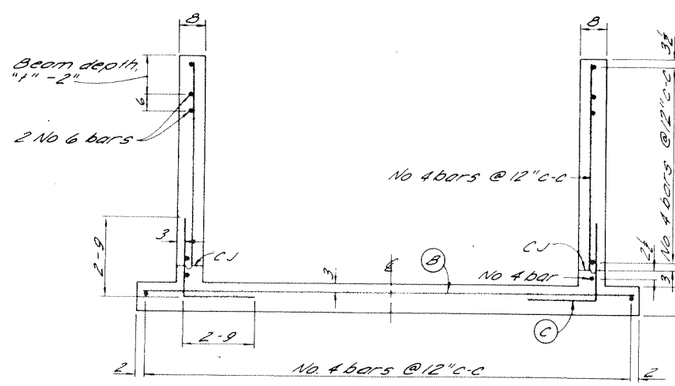

TYPICAL CROSS SECTION

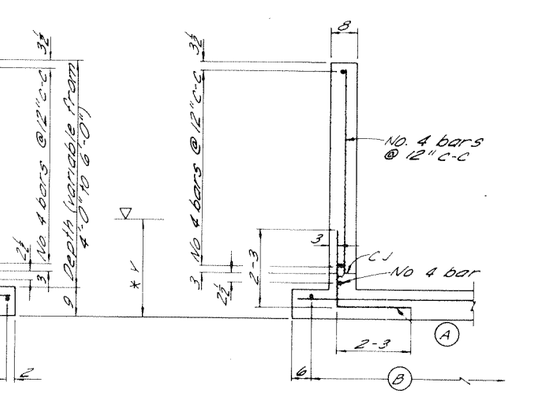

TYPICAL CROSS SECTION OF ENDWALL

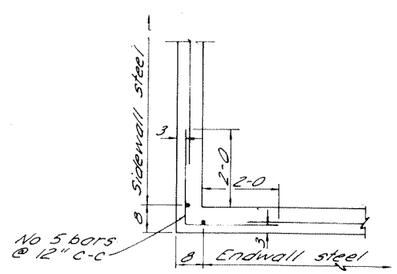

CORNER DETAIL

TENTATIVE-SUBJECT TO REVISION

STANDARD WATERTIGHT REINFORCED CONCRETE WASTE HOLDING TANK

SHEET 3 OF 4

U. S. DEPARTMENT OF AGRICULTURE
SOIL CONSERVATION SERVICE

Designed ..... Date ..... Approved by .....
Drawn ..... Title .....
Traced ..... Sheet ..... Drawing No. .....
Checked ..... No. .....

formerly 7-E-22,180-N

4-E-30,919

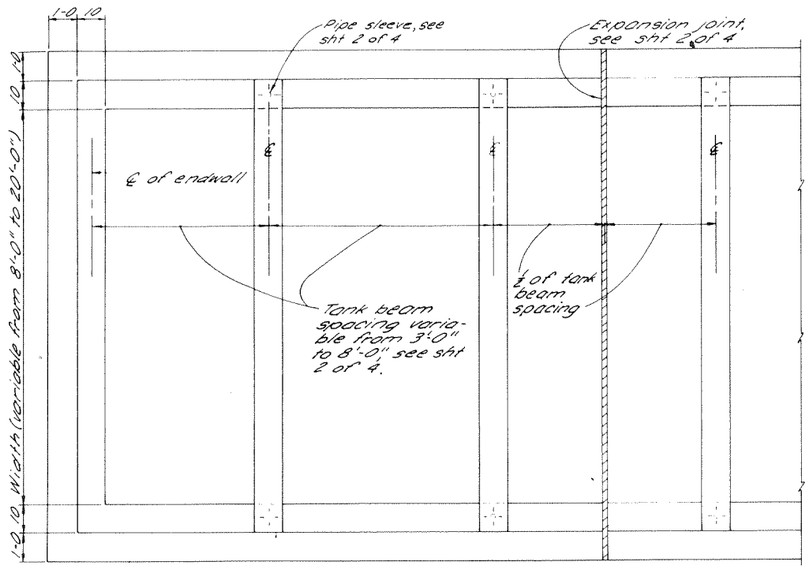

HALF PLAN

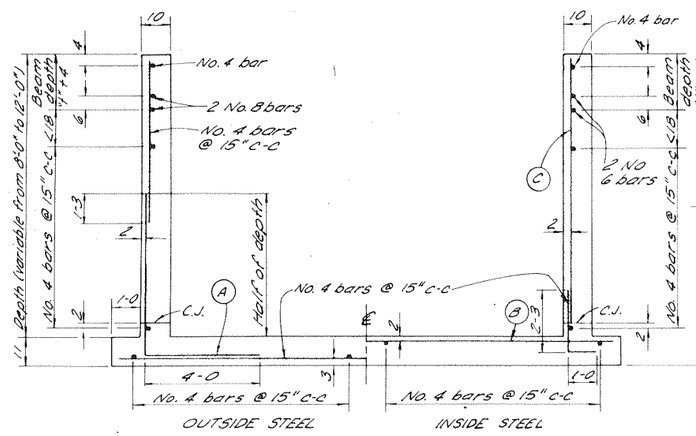

TYPICAL CROSS SECTION

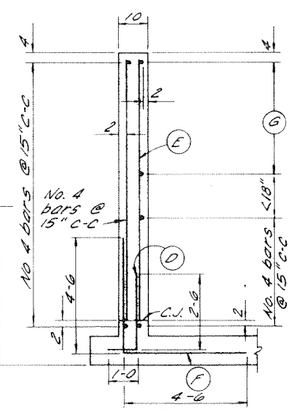

TYPICAL CROSS SECTION OF ENDWALL

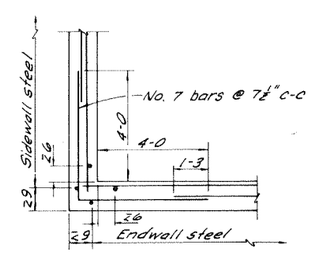

CORNER DETAIL

TABLE 1

Class 1 wall loading with type A or B loading on Tank Beams

Depth of Tank-Feet	Bar Designation For Size and Spacing	Inside Width of Tank-Feet 8	12	16	20
8	(A)	No. 4 @ 12	No. 5 @ 10	No. 7 @ 12	No. 6 @ 6
	(B)	No. 5 @ 13	No. 6 @ 12	No. 6 @ 9	No. 6 @ 6
	(C)	No. 4 @ 15	No. 4 @ 15	No. 4 @ 15	No. 4 @ 15
	(D)	No. 4 @ 15	No. 4 @ 15	No. 4 @ 15	No. 4 @ 15
	(E)	No. 4 @ 15	No. 4 @ 15	No. 4 @ 15	No. 4 @ 15
	(F)	No. 4 @ 15	No. 5 @ 12	No. 4 @ 6	No. 6 @ 10
	(G)	No. 4 @ 15	No. 4 @ 15	No. 4 @ 15	No. 4 @ 15
	* Y (Ft.)	8.8	7.5	6.8	6.3
10	(A)	No. 6 @ 15	No. 5 @ 7½	No. 6 @ 7½	No. 6 @ 5
	(B)	No. 6 @ 14	No. 6 @ 9	No. 6 @ 7	No. 7 @ 6
	(C)	No. 5 @ 12	No. 5 @ 15	No. 4 @ 13	No. 4 @ 15
	(D)	No. 4 @ 15	No. 4 @ 15	No. 4 @ 13	No. 5 @ 15
	(E)	No. 4 @ 15	No. 4 @ 13	No. 4 @ 15	No. 4 @ 15
	(F)	No. 4 @ 12	No. 5 @ 10	No. 6 @ 9½	No. 5 @ 5
	(G)	No. 4 @ 15	No. 4 @ 15	6 No. 4 @ 12	5 No. 5 @ 15
	* Y (Ft.)	10.2	8.6	7.7	7.0
12	(A)	No. 6 @ 10	No. 6 @ 7½	No. 6 @ 6	No. 7 @ 6
	(B)	No. 6 @ 8	No. 6 @ 7	No. 7 @ 7½	No. 7 @ 6
	(C)	No. 6 @ 10	No. 6 @ 12	No. 6 @ 15	No. 4 @ 12
	(D)	No. 4 @ 15	No. 4 @ 15	No. 5 @ 15	No. 6 @ 15
	(E)	No. 4 @ 15	No. 4 @ 15	No. 5 @ 15	No. 5 @ 15
	(F)	No. 4 @ 10	No. 5 @ 7½	No. 6 @ 7½	No. 7 @ 7½
	(G)	No. 4 @ 15	No. 4 @ 15	No. 5 @ 15	No. 6 @ 15
	* Y (Ft.)	11.6	9.6	8.4	7.6

TABLE 2

Class 2 wall loading with type A or B loading on Tank Beams

Depth of Tank-Feet	Bar Designation For Size and Spacing	Inside Width of Tank-Feet 8	12	16	20
8	(A)	No. 5 @ 15	No. 4 @ 6	No. 6 @ 7½	No. 6 @ 6
	(B)	No. 5 @ 13	No. 6 @ 12	No. 6 @ 9	No. 6 @ 6
	(C)	No. 4 @ 12	No. 4 @ 15	No. 4 @ 15	No. 4 @ 15
	(D)	No. 4 @ 15	No. 4 @ 15	No. 4 @ 15	No. 4 @ 15
	(E)	No. 4 @ 15	No. 4 @ 15	No. 4 @ 15	No. 4 @ 15
	(F)	No. 4 @ 12	No. 6 @ 15	No. 6 @ 10	No. 6 @ 7½
	(G)	No. 4 @ 15	No. 4 @ 15	No. 4 @ 13	No. 4 @ 13
	* Y (Ft.)	8.8	7.5	6.8	6.3
10	(A)	No. 6 @ 12	No. 6 @ 10	No. 6 @ 7½	No. 6 @ 5
	(B)	No. 6 @ 14	No. 6 @ 9	No. 6 @ 7	No. 7 @ 6
	(C)	No. 6 @ 12	No. 6 @ 15	No. 5 @ 12	No. 4 @ 15
	(D)	No. 4 @ 15	No. 4 @ 15	No. 4 @ 12	No. 5 @ 15
	(E)	No. 4 @ 15	No. 4 @ 13	No. 4 @ 12	No. 5 @ 15
	(F)	No. 5 @ 15	No. 6 @ 10	No. 5 @ 5	No. 6 @ 5
	(G)	No. 4 @ 15	No. 4 @ 12	No. 5 @ 14	No. 6 @ 15
	* Y (Ft.)	10.2	8.6	7.7	7.0
12	(A)	No. 6 @ 7½	No. 6 @ 6	Design is unavailable. Allowable shear stress is exceeded in endwall.	Design is unavailable. Allowable shear stress is exceeded in endwall.
	(B)	No. 6 @ 8	No. 6 @ 7		
	(C)	No. 6 @ 7½	No. 6 @ 7½		
	(D)	No. 4 @ 15	No. 4 @ 15		
	(E)	No. 4 @ 15	No. 5 @ 15		
	(F)	No. 5 @ 12	No. 6 @ 7½		
	(G)	No. 4 @ 15	No. 5 @ 15		
	* Y (Ft.)	11.6	9.6		

* Dimension "Y" refers to the maximum water table for buoyancy check per notes on sheet 1.

TENTATIVE-SUBJECT TO REVISION

STANDARD WATERTIGHT REINFORCED CONCRETE WASTE HOLDING TANK

STANDARD DWG. No.

DATE SHEET 4 OF 4

U. S. DEPARTMENT OF AGRICULTURE
SOIL CONSERVATION SERVICE

Designed — Date — Approved by
Drawn — Title
Traced — Title
Checked — Sheet No. of — Drawing No

formerly 7-E-22,180-N

4-E-30,919