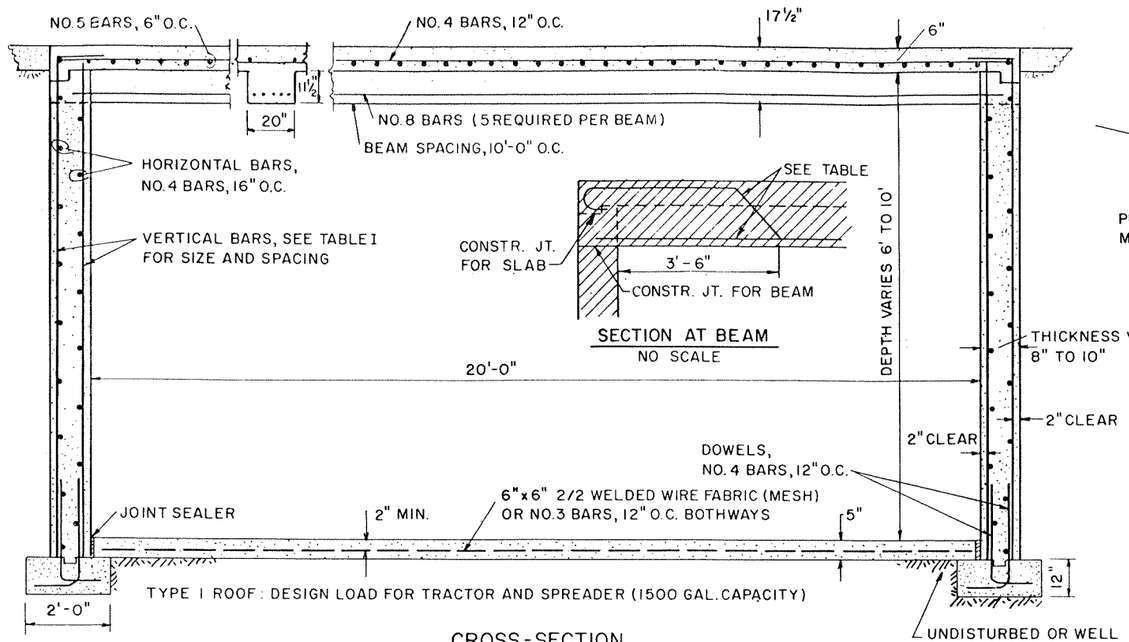

CROSS-SECTION

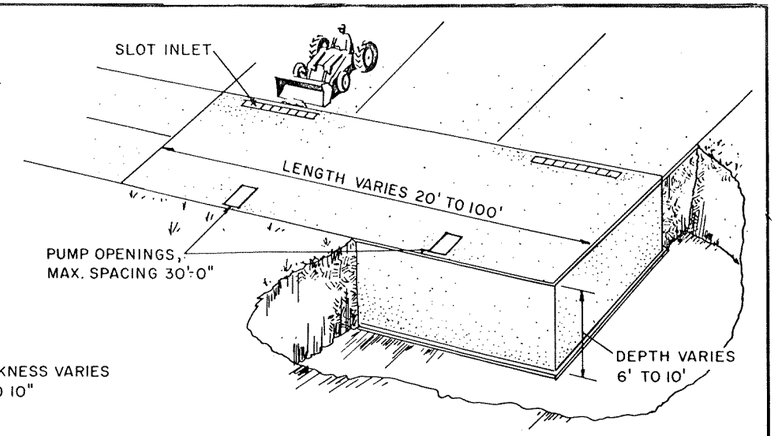

GENERAL VIEW

TABLE I - WALL THICKNESS AND VERTICAL REINFORCEMENT

HEIGHT, FT.	THICKNESS, IN.	REINFORCEMENT SIZE & SPACING	REMARKS
6	8	NO.5 @ 9" O.C.	SINGLE CURTAIN
8	9	NO.4 @ 12" OUTSIDE NO.5 @ 10" INSIDE	DOUBLE CURTAIN SEE DETAIL
10	10	NO.5 @ 9" OUTSIDE NO.5 @ 7" INSIDE	DOUBLE CURTAIN SEE DETAIL

TABLE II - APPROXIMATE CAPACITIES IN GALLONS - 20 FT. INSIDE WIDTH

	LENGTH, FT.				
DEPTH, FT.	20	40	60	80	100
6	18,000	36,000	54,000	72,000	90,000
8	24,000	48,000	72,000	96,000	120,000
10	30,000	60,000	90,000	120,000	150,000

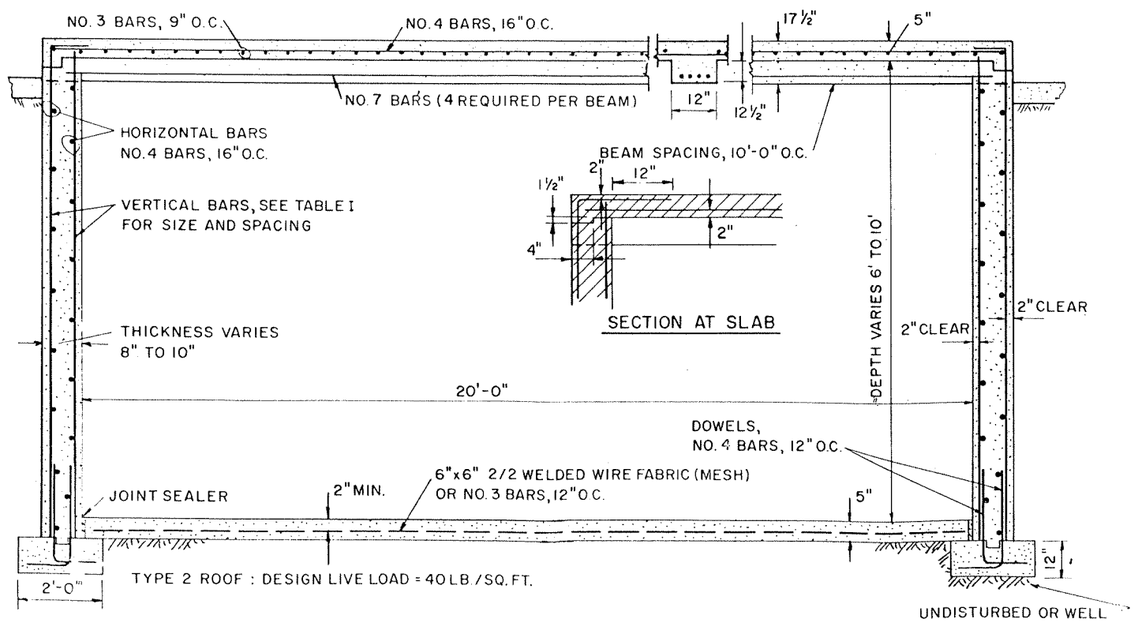

ALTERNATE CROSS-SECTION

NOT DESIGNED TO SUPPORT TRACTOR AND/OR SPREADER TRAFFIC

COOPERATIVE EXTENSION WORK IN AGRICULTURE AND HOME ECONOMICS

AND

UNITED STATES DEPARTMENT OF AGRICULTURE COOPERATING

RECTANGULAR CONCRETE MANURE TANK

PCA '65	EX. 5981	SHEET 1 OF 3

USDA-SCS-FORT WORTH, TEX. 1970

9-70 4-R-29767

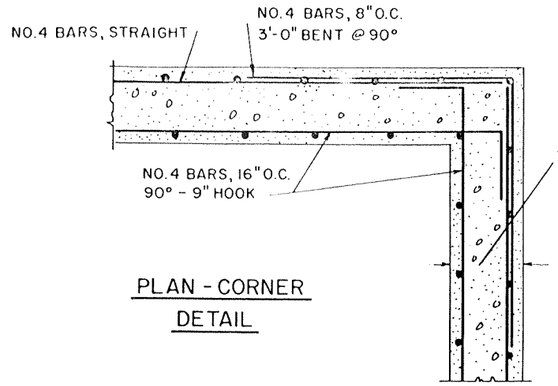

PLAN - CORNER DETAIL

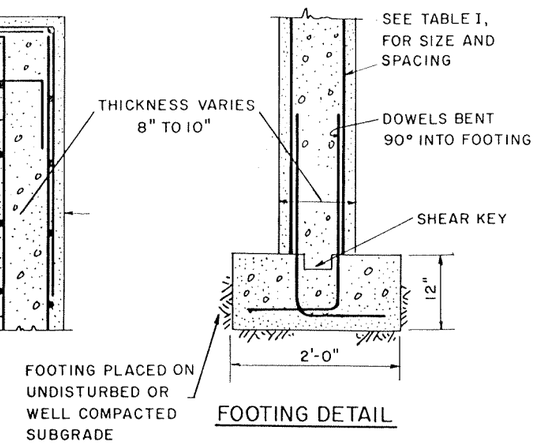

FOOTING DETAIL

GENERAL NOTES

1. SUGGESTED MIX DESIGN: SPECIFY MIX CONTAINING 6 BAGS OF PORTLAND CEMENT PER CU. YD. AND NOT MORE THAN 6 GAL. OF WATER PER BAG OF CEMENT. SPECIFY 5-7% ENTRAINED AIR.
2. PRECAST PLANK OR DOUBLE TEES MAY BE USED AS ALTERNATE ROOF SYSTEM. CONSULT MFG. FOR DETAILS.
3. THE TANK COVER SHOULD BE INSTALLED BEFORE WALLS ARE BACKFILLED.
4. SIZE AND SHAPE OF PUMP, AGITATOR AND FILL OPENINGS MAY VARY. CONSULT EQUIPMENT MFG. FOR DETAILS.
5. BARN CLEANER OR GUTTER INLET MAY BE ADAPTED TO SYSTEM.
6. A FLAP VALVE IN THE FLOOR MAY BE USED IN AREAS SUBJECT TO HIGH WATER TABLE TO AVOID FLOATATION OR BOUYANCY PROBLEMS WHEN TANK IS EMPTY.
7. THESE TANKS MAY BE BUILT ABOVE GROUND USING TYPE-2 ROOF.
8. FORMS TO BE TIGHT, STRAIGHT AND WELL BRACED. FORMS SHOULD BE OILED TO PERMIT EASY REMOVAL.
9. STD. MFG. WALL FORMS MAY BE USED IN WALL CONSTRUCTION.
10. CONCRETE MUST BE EVENLY DISTRIBUTED IN FORMS AND SPADED OR MECH. VIBRATED TO ASSURE CONSOLIDATION.
11. FORMS FOR CAST-IN-PLACE TANK COVER MUST BE ADEQUATELY SHORED. SHORING AND FORMS MUST BE REMOVED THROUGH PUMP AND AGITATOR OPENING.
12. THE AREA SURROUNDING THE TANK SHOULD BE PAVED, (MIN. WIDTH 10') OR PAVED APPROACH RAMPS BUILT.

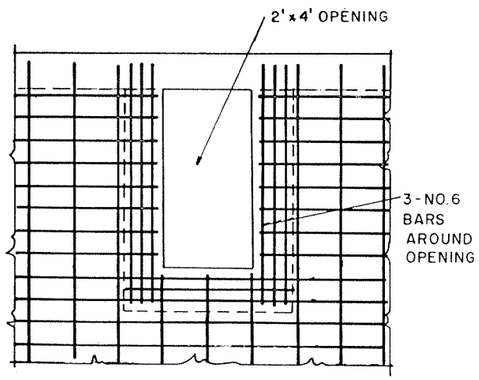

PUMP & AGITATOR OPENING
(MAX. SPACING 30')

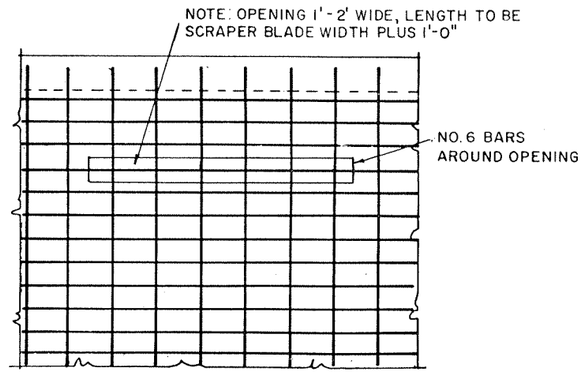

SLOT INLET

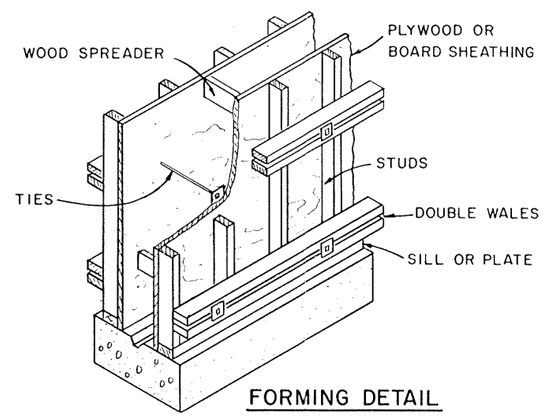

FORMING DETAIL

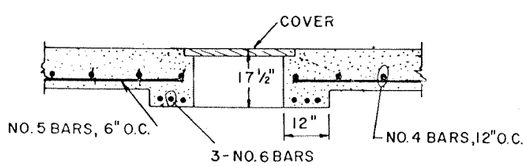

ALTERNATE OPENINGS

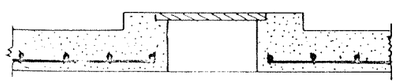

NOTE: DROP BEAM MAY BE INVERTED AND USED AS CURB FOR EASE IN FORMING OPENING

CROSS-SECTION AT PUMP & AGITATOR OPENING

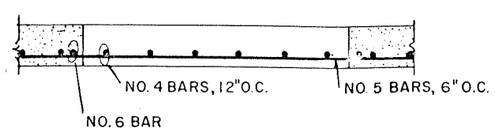

CROSS-SECTION AT SLOT INLET

NOTE:
BOTTOM REINFORCING STEEL EXTENDS ACROSS OPENING TO ACT AS SAFETY GRATING

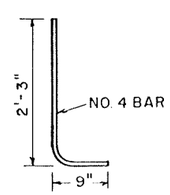

DOWEL DETAIL

COOPERATIVE EXTENSION WORK IN AGRICULTURE AND HOME ECONOMICS

AND
UNITED STATES DEPARTMENT OF AGRICULTURE COOPERATING

RECTANGULAR CONCRETE MANURE TANK

PCA '65	EX. 5981	SHEET 2 OF 3

NOTE: PAVE AROUND TANK AS ALTERNATE TO APPROACH AND EXIT RAMPS.
IF AREA AROUND TANK IS NOT PAVED, PROVIDE APPROACH RAMPS AS SHOWN.
DO NOT DRIVE TRACTOR OR SPREADER TANK OR OTHER HEAVY LOADS ALONG SIDE OF TANK WALLS EXCEPT WHEN AREA AROUND TANK IS PAVED.
USE CARE IN BACKFILLING TANK. PAVE ONLY ON WELL COMPACTED SOIL.

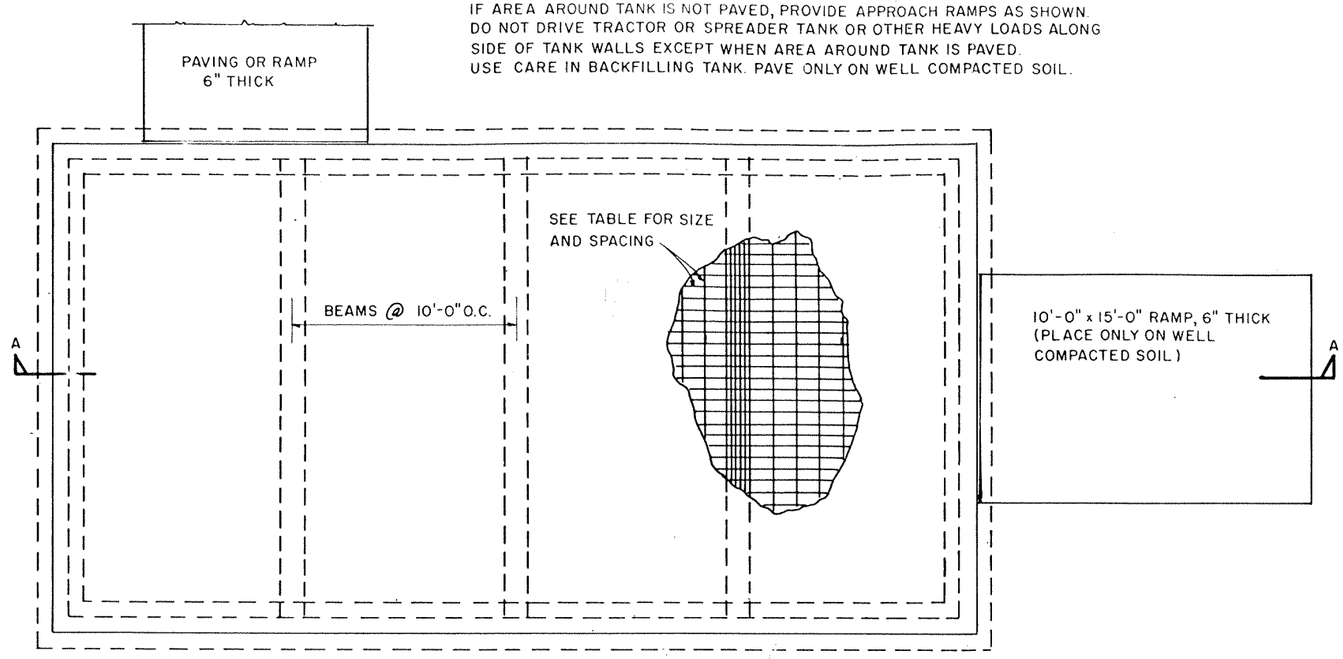

PLAN VIEW
TANK AND RAMP

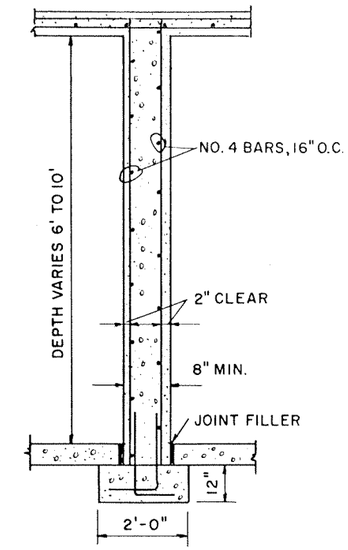

CROSS - SECTION
PARTITION WALL
(OPTIONAL)

NOTE: SEE TABLE
SLAB THICKNESS AND REINFORCEMENT

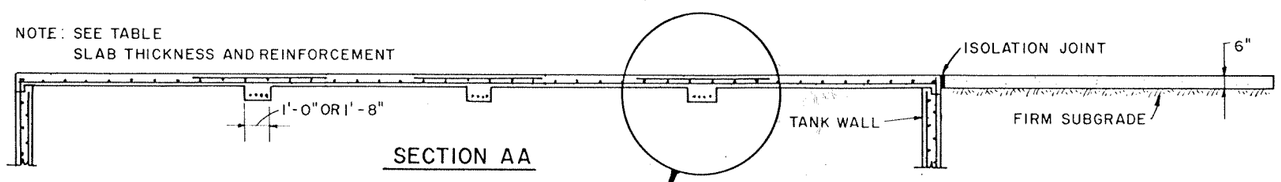

SECTION AA

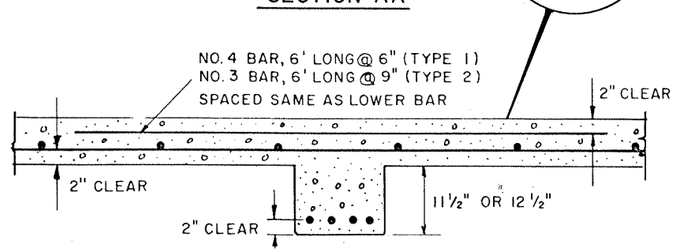

BEAM & SLAB DETAIL

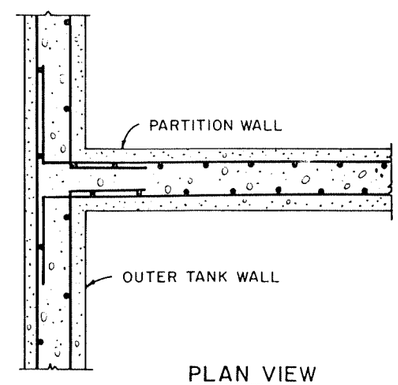

PLAN VIEW
PARTITION WALL

TABLE-IV - VERTICAL REINFORCEMENT FOR PARTITION WALL

HEIGHT, FT.	THICKNESS, IN.	REINFORCEMENT REQUIRED (EACH CURTAIN)
6	8	NO. 4 BARS, 12" O.C.
8	8	NO. 4 BARS, 12" O.C.
10	10	NO. 5 BARS, 9" O.C.

TABLE III - THICKNESS AND REINFORCEMENT REQUIRED FOR BEAM AND SLAB COVER

	BEAM SIZE INCLUDING SLAB	REINFORCEMENT REQUIRED IN BEAM	SLAB THICKNESS	SLAB REINFORCEMENT PERPENDICULAR TO BEAMS	SLAB REINFORCEMENT PARALLEL TO BEAMS
TYPE 1 ROOF	20" x 17½"	5 - NO. 8 BARS	6"	NO. 5 BARS, 6" O.C.	NO. 4 BARS, 12" O.C.
TYPE 2 ROOF	12" x 17½"	4 - NO. 7 BARS	5"	NO. 3 BARS, 9" O.C.	NO. 4 BARS, 16" O.C.

COOPERATIVE EXTENSION WORK IN
AGRICULTURE AND HOME ECONOMICS
AND
UNITED STATES DEPARTMENT OF AGRICULTURE COOPERATING

RECTANGULAR CONCRETE
MANURE TANK

PCA, '65	EX. 5981	SHEET 3 OF 3