SKG
ENGINEERING
SURVEYING ♦ LABORATORY ♦ ENVIRONMENTAL

1122 SOUTH BRYANT BLVD.
SAN ANGELO, TEXAS 76903

PHONE: 325.655.1288
FAX: 325.657.8189

June 24, 2009

09-A-0773

Natural Resource Conservation Service
3878 West Houston Harte Expressway
San Angelo, Texas 76901

Subject: Precast Concrete Water Trough Design
Landers Precast Concrete
San Angelo, Texas

To Whom It May Concern,

SKG Engineering has designed and produced drawings of each type and size of precast concrete water trough manufactured by Landers Precast Concrete. The troughs, as drawn, meet the requirements of ACI 318-99.

For your reference please see the attached concrete mix design, concrete testing results, and reinforcing steel information.

If you have any questions or comments, or if we can be of any further service to you, please do not hesitate to contact us at (325) 655-1288.

Sincerely,
SKG Engineering

Jerry White, E.I.T.

Russell T. Gully, P.E.

STATE OF TEXAS
RUSSELL T. GULLY
87727
LICENSED
PROFESSIONAL ENGINEER

CC: File
Attachment

N:\Engineering\2009\09a0773 Lonnie Landers\Letter.doc

GENERAL NOTES

A. DESIGN CRITERIA AND BUILDING CODE

1. ACI-318 CODE AND COMMENTARY

2. LOADS — LOADS: LOADING PRODUCED BY TROUGHS BEING FULL OF WATER, SELF WEIGHT

B. PRE-CAST CONCRETE

1. WORK SHALL CONFORM TO ALL REQUIREMENTS OF ACI 318, PUBLISHED BY THE AMERICAN CONCRETE INSTITUTE, DETROIT, MICHIGAN, EXCEPT AS MODIFIED BY THE REQUIREMENTS OF THESE CONTRACT DOCUMENTS.

2. UNLESS NOTED OTHERWISE, ALL STRUCTURAL CONCRETE SHALL BE NORMAL WEIGHT CONCRETE, UNIT WEIGHT APPROXIMATELY 145 PCF.

3. CONCRETE MIX DESIGNS SHALL CONFORM TO THE FOLLOWING:

A. PRE-CAST CONCRETE:
i. 1-1/2 INCH MAXIMUM COARSE AGGREGATE;
ii. MINIMUM 28-DAY COMPRESSIVE STRENGTH OF 4,000 PSI;
iii. MAXIMUM WATER-TO-CEMENTITIOUS MATERIAL RATIO OF 0.53;
iv. SLUMP BETWEEN 4 AND 6 INCHES;
v. AIR CONTENT SHALL BE 2% TO 4%; AND
vi. USE OF FLY-ASH AND/OR GROUND-GRANULATED-BLAST-FURNACE -SLAG IS NOT PERMITTED.

9. ALL EXPOSED CONCRETE SURFACES SHALL HAVE A TOOLED FINISH UNLESS NOTED ELSEWHERE IN THE PLANS OR CONSTRUCTION DOCUMENTS.

10. ADDITION OF WATER TO BATCHED CONCRETE AT THE JOB SITE IS LIMITED TO THE CASE WHEN THE WORKABILITY OF DELIVERED CONCRETE IS INSUFFICIENT FOR PRACTICAL PLACEMENT AND ALL OF THE WATER ALLOWED BY THE MIX DESIGN HAS NOT BEEN ADDED AT THE START OF MIXING. IN NO CASE SHALL THE SPECIFIED WATER-TO-CEMENTITIOUS MATERIAL RATIO OR SLUMP BE EXCEEDED. UNDER NO CIRCUMSTANCES SHALL WATER BE ADDED TO THE CONCRETE MIXTURE AFTER PART OF THE BATCH HAS BEEN DISCHARGED.

C. REINFORCING STEEL

1. PROVIDE NEW BILLET STEEL REINFORCING CONFORMING TO ASTM A615, GRADE 60.

2. PROVIDE WELDED WIRE FABRIC CONFORMING TO ASTM A185. LAP LENGTH FOR WELDED WIRE FABRIC IS 12" MINIMUM.

3. CONCRETE CLEAR COVER OVER REINFORCING SHALL BE IN ACCORDANCE WITH THE REQUIREMENTS OF ACI 318-99 AS FOLLOWS:

CAST AGAINST AND PERMANENTLY EXPOSED TO EARTH	3 in.
EXPOSED TO EARTH OR WEATHER, #6 BAR AND LARGER	2 in.
EXPOSED TO EARTH OR WEATHER, #5 BAR AND SMALLER	1 1/2 in.
SLABS, WALLS, JOISTS NOT EXPOSED TO EARTH OR WEATHER	3/4 in.
BEAMS AND COLUMNS NOT EXPOSED TO EARTH OR WEATHER	1 1/2 in.

4. ALL REINFORCING SHALL BE CONTINUOUS UNLESS NOTED OTHERWISE. PROVIDE CLASS "B" REINFORCING SPLICES. PROVIDE STANDARD 90 DEGREE HOOKS IN ACCORDANCE WITH ACI 318-99, UNLESS NOTED OTHERWISE. STAGGER SPLICES UNLESS SPECIFICALLY NOTED.

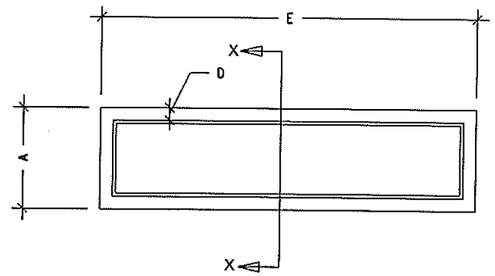

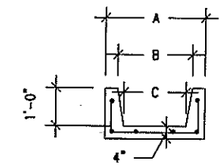

SECTION X-X

RECTANGULAR CONCRETE TROUGHS					
A	B	C	D	E	REINFORCEMENT
1'-10"	1'-4"	1'-0"	3"	5'	#4@12" OC, EW SIDES AND BOTTOM
2'-6"	2'-0"	1'-6"	3"	8'	#4@12" OC, EW SIDES AND BOTTOM
2'-8"	2'-0"	1'-8"	4"	10'	#4@12" OC, EW SIDES AND BOTTOM
2'-8"	2'-0"	1'-8"	4"	12'	#4@12" OC, EW SIDES AND BOTTOM

1 RECTANGULAR TROUGHS

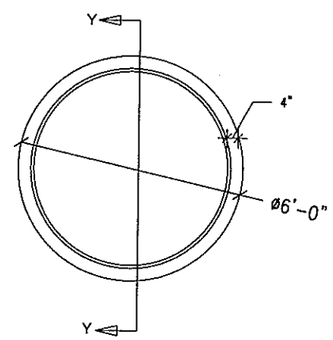

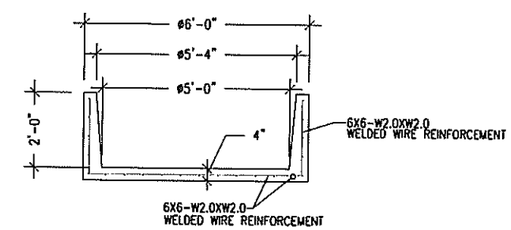

SECTION Y-Y

2 CIRCULAR TROUGH

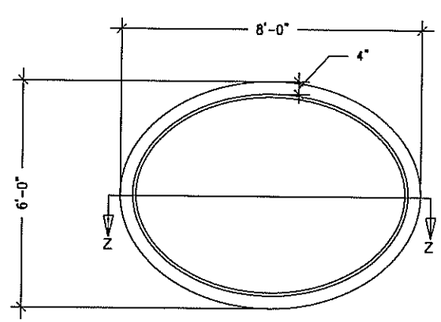

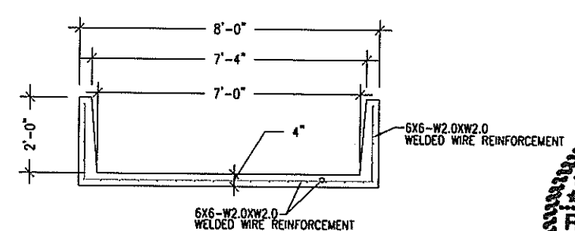

SECTION Z-Z

3 OVAL TROUGH

STATE OF TEXAS
RUSSELL T. GULLY
87727
LICENSED
PROFESSIONAL ENGINEER

7-28-09

SKG ENGINEERING
SURVEYING • LABORATORY • ENVIRONMENTAL
11122 SOUTH BRYANT BLVD.
SAN ANGELO, TEXAS 76903
PHONE: 325.655.1288
FAX: 325.657.8189
FIRM REGISTRATION NUMBER F-7608
www.skge.com

LANDERS PRECAST CONCRETE
SAN ANGELO, TEXAS

PRE-CAST CONCRETE TROUGH PLAN & SECTION

REVISIONS
7/28/09: COVER REQUIREMENTS UPDATED.

DWG. BY: JP	DWG. DATE: 07-28-2009
JOB NO. 09-A-0773	SHEET NO. C1.0
SCALE: 1/4"=1'	