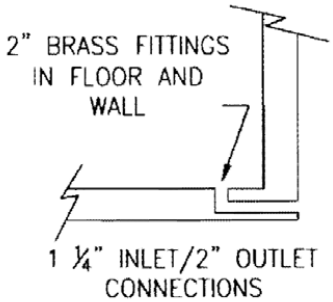

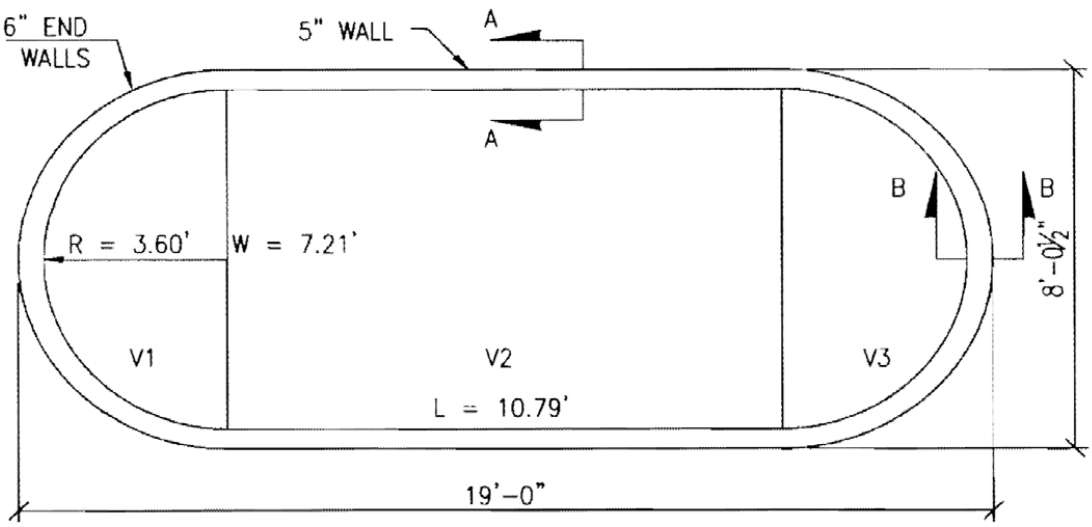

PLAN VIEW

SCALE: ¼"=1'-0"

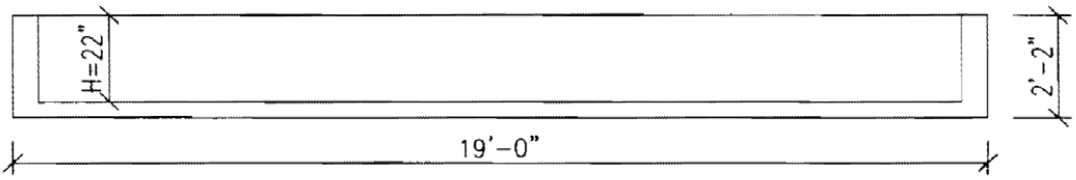

SIDE VIEW

SCALE: ¼"=1'-0"

NOTE:
1 - 1 ¼" BRASS INLET
1 - 2" OUTLET

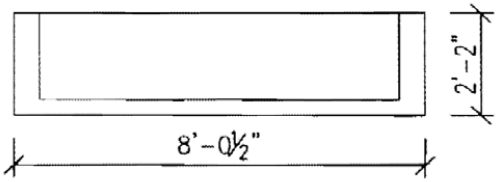

FRONT VIEW

SCALE: ¼"=1'-0"

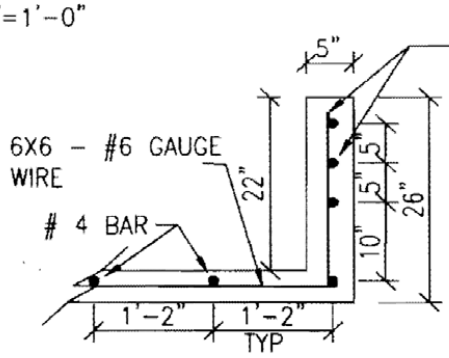

SECTION A-A

SCALE: ½"=1'-0"

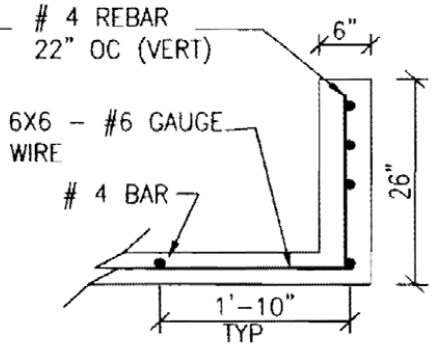

SECTION B-B

SCALE: ½"=1'-0"

5/18/10

STATE OF TEXAS
DAVID W. SHEBLAK
66501
REGISTERED
PROFESSIONAL ENGINEER

JOHN D. MERCER & ASSOC., INC.
F-324

VOLUME:

V = V1 + V2 + V3
= 40.69+155.59+40.69
= 236.97 cu. ft.
= 1772.66 gal.

V1 = ½(¶ R²)(H)
= 0.5x3.14x3.60²X2
= 40.69 cu. ft.

V2 = L X W X H
= 10.79'x7.21'x2'
= 155.59 cu. ft.

V3 = ½(¶ R²)(H)
= 0.5x3.14x3.60²x2
= 40.69 cu. ft.

MANNA'S PRE-CAST CONCRETE, INC.
1,600 GALLON WATER TROUGH