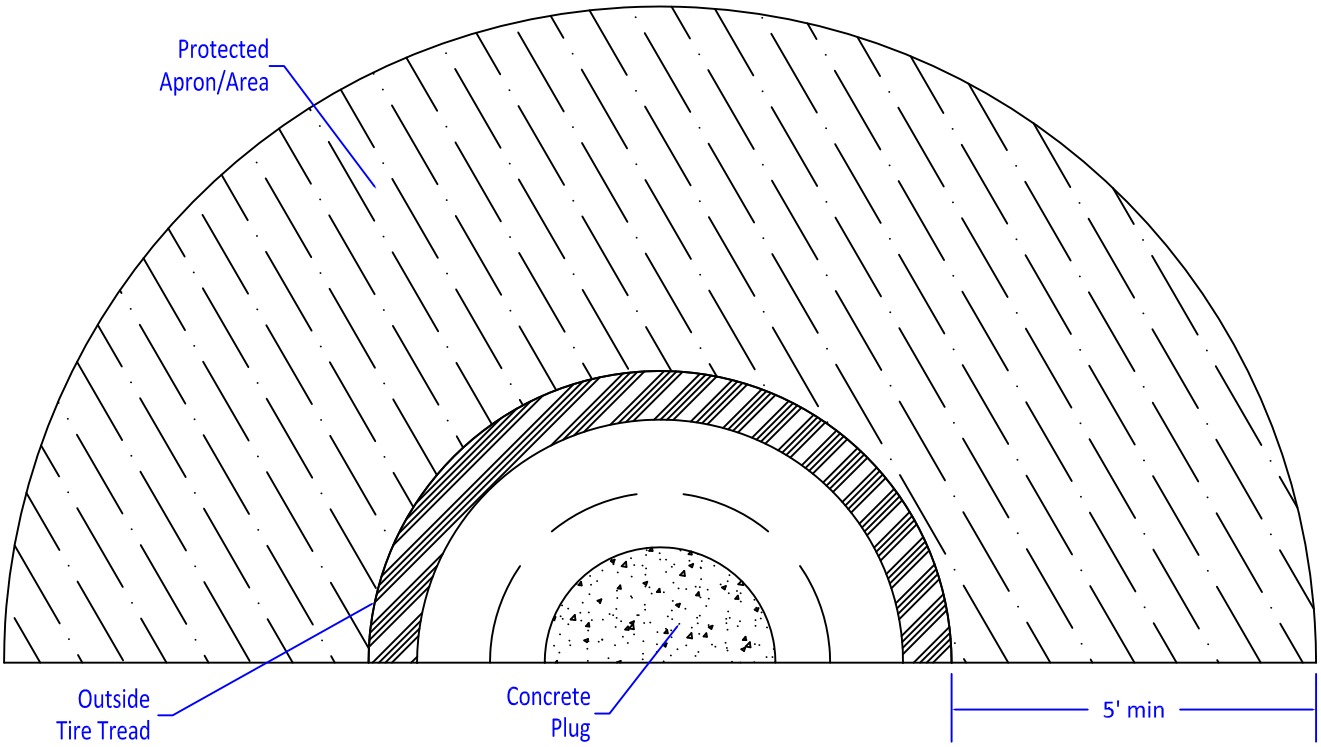

HALF-PLAN VIEW

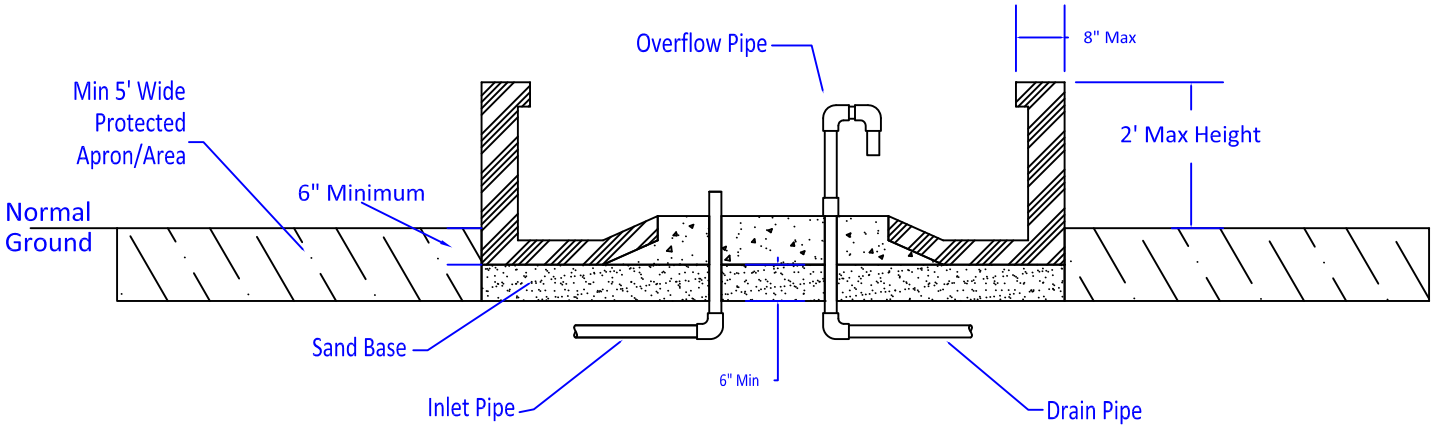

SECTION VIEW

OPTIONAL CATTLE GUARD

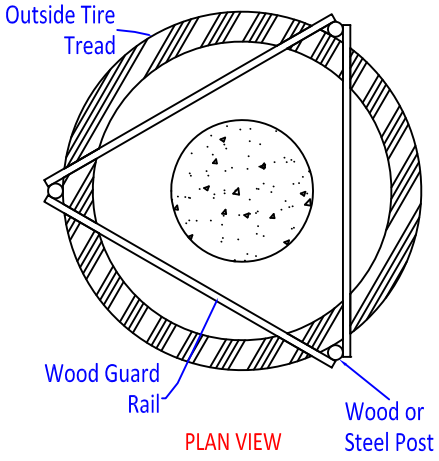

PLAN VIEW

See General Notes on Sheet 2
Drawing NOT TO SCALE
Plumbing Locations May Vary

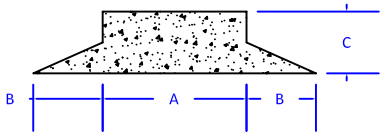

CONCRETE PLUG DETAIL

TIRE DETAILS					
DIA	MIN	VOL	A	B	C
feet	PLY	gal	inches	inches	inches
5	23	190	24	14	8
6	24	250	23	9	9
8	38	450	38	17	10
10	50	700	50	25	17

SHEET 1 of 2
DRAWING NO. TX-DWG-9006
REVISIONS
DATE

NRCS
United States Department of Agriculture
Natural Resources Conservation Service

HEAVY EQUIP TIRE WATERING FACILITY

Rubber Tire Trough with Poured Concrete Plug and Protected Apron

DESIGNED BY: RFB & JPR
DRAWN BY: JOSH RODE
REVISED BY: KCS
FILE NAME: TX-DWG-9006
DATE PLOTTED: 11/02/2011

GENERAL NOTES:

1. A sand base is required when the watering facility is to be located over a clay sub-soil subject to significant shrink and swell. Minimum depth of this sand base is six (6) inches.

2. Plumbing shall be new 2-inch galvanized steel, copper, bronze, or PVC plastic Sch-40 unthreaded or Sch-80 threaded, PE (160 PSI minimum) pipe. All fittings shall comply with ASTM standard for the type of fitting and material used.

a. Watering facilities shall be equipped with a water inlet pipe, drainage outlet and overflow outlet as either individual outlets or in combination. Overflow shall be piped to a stable or suitable point of release. This point of release should be a minimum of ten (10) feet from the edge of the trough

b. Control devices shall be installed to regulate the water level in the water storage facility and prevent unnecessary overflows

c. Double check valves or other measures prescribed in local plumbing codes are required at watering facility inlets when watering facilities are connected to waterlines that have domestic users.

d. Alternative methods of plumbing may be used as approved by the NRCS engineer.

3. Foundation and Adjacent Area Construction Procedures:

a. The foundation is prepared by leveling, smoothing, and compacting the area where the watering facility is to be placed. The foundation shall be free of debris and rocks or pebbles larger than ½-inch in diameter. All plumbing used in the floor shall be positioned prior to final smoothing of the foundation. The foundation shall support the watering facility such that the finished, settled facility does not vary from the high point to the low point around its lip more than 2-inches for facilities 14-feet and less in diameter. When the watering facility is not level around its lip, the top of the overflow outlet shall be a minimum of 1-inch below the lowest point on the lip

b. The area adjacent to the watering facility that will be trampled by livestock shall have an apron with a minimum width of 5-feet surrounding the watering facility . The apron shall be constructed of 4-inch thick concrete, 6-inch thick gravel, crushed rock, or caliche, or 12-inch thick mounded soil sloped away from the watering facility at a 10:1 slope.

4. Optional Cattle Guard:

a. Posts for Cattle Guard should be 4-inch diameter wood or 1-1/2 in diameter galvanized steel.

b. Posts should be set a minimum of 3-feet below normal ground level

c. Wood guard rails should be 2-inch x 8-inch wooden planks, bolted to post.

5. WARNING:

a. It is the responsibility of the landowner/operator to determine the presence of toxic chemicals in the tire and take all needed action(s) to protect the health of the livestock

b. Operator should be cautioned about ingestion of rubber by horses.

NRCS
United States Department of Agriculture
Natural Resources Conservation Service

WATERING FACILITY
HEAVY EQUIPMENT TIRE TROUGH
Rubber Tire Trough with Poured Concrete Plug and Protected Area

DESIGNED BY: RFB & JPR
DRAWN BY: JOSH RODE
REVISED BY: KCS
FILE NAME: TX-DWG-9006
DATE PLOTTED: 11/02/2011