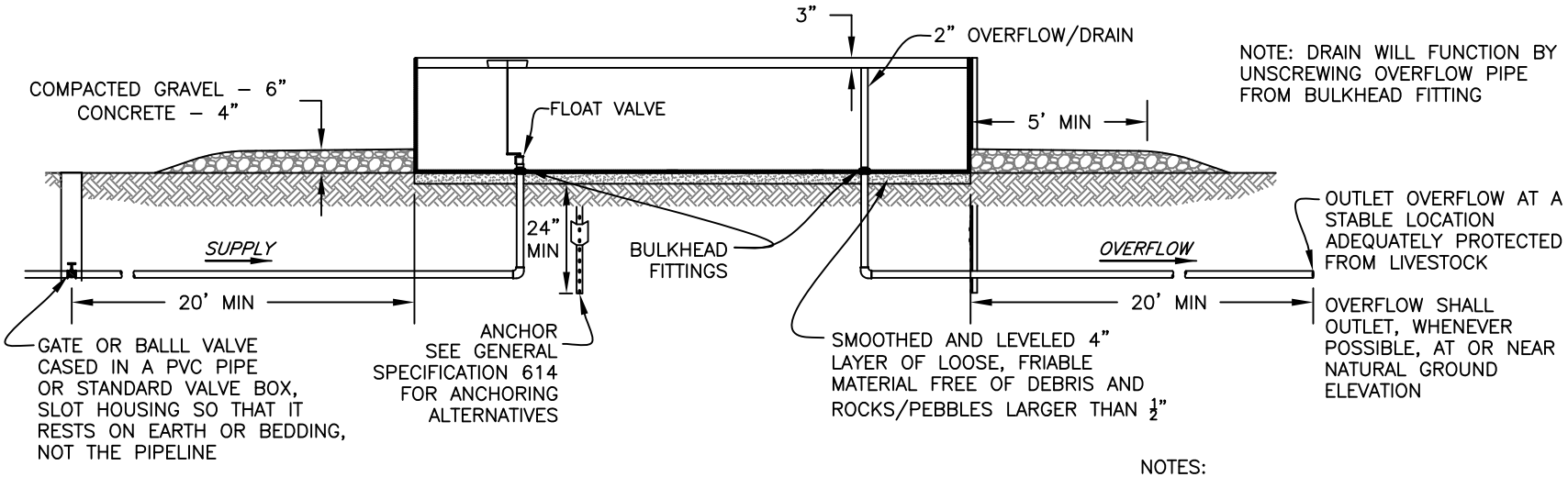

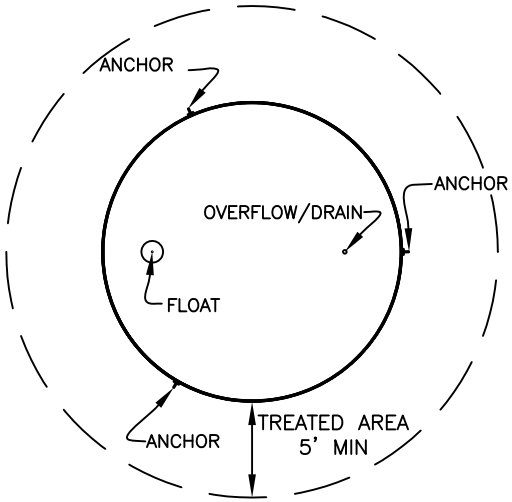

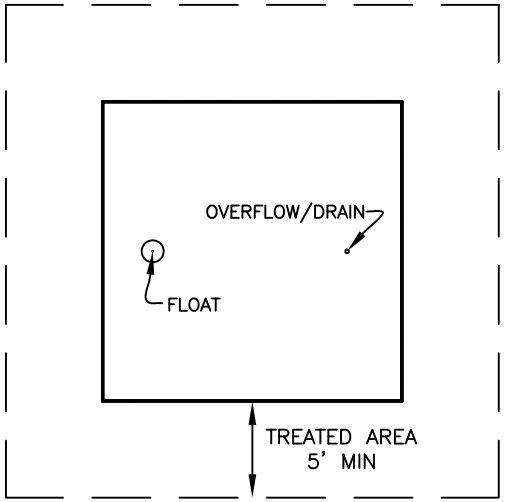

ESTIMATED QUANTITIES OF HEAVY USE AREA PROTECTION

DIAMETER (FT)	CAPACITY (GAL)	GRAVEL (CY)	CONCRETE (CY)
6	370	3.2	2.1
7	504	3.5	2.3
8	658	3.8	2.5
9	833	4.1	2.7
10	1028	4.4	2.9
12	1481	4.9	3.3
14	2015	5.5	3.7
16	2632	6.1	4.1
20	4113	7.3	4.8
25	6426	8.7	5.8

ESTIMATED QUANTITIES OF HEAVY USE AREA PROTECTION

L X W (FT)	CAPACITY (GAL)	GRAVEL (CY)	CONCRETE (CY)
10 X 10	1309	5.6	3.7
10 X 15	1964	6.5	4.3
10 X 20	2618	7.4	4.9
15 X 15	2946	7.4	4.9
20 X 20	5237	9.3	6.2

NOTES:

INCORPORATE ESCAPE FEATURES INTO THE WATERING FACILITY WHEN LOCAL KNOWLEDGE AND EXPERIENCE INDICATE THAT WILDLIFE MAY BE AT RISK OF DROWNING.

THE THICKNESS OF THE HEAVY USE AREA PROTECTION SHALL BE MEASURED FROM THE BOTTOM OF THE WATERING FACILITY.

ESTIMATED QUANTITIES ARE BASED ON NEAT LINE MINIMUM DIMENSIONS AND MAY VARY WITH SPECIFIC WATERING FACILITY DESIGNS. CAPACITY IS BASED ON A 2' WALL HEIGHT WITH A WATER DEPTH OF 1.75'.

GALVANIZED WATERING FACILITIES WILL NOT BE USED WHERE CORROSIVE WATER OR SOIL CONDITIONS ARE ENCOUNTERED.

PLACEMENT OF OVERFLOW/DRAIN AND SUPPLY INLET WITHIN THE WATERING FACILITY MAY BE ALTERED IF ADEQUATE PROTECTION FROM LIVESTOCK IS PROVIDED. ALL PLUMBING INCLUDING SUPPLY VALVES AND OVERFLOW OUTLETS SHALL BE PROTECTED FROM LIVESTOCK.

SHOULD A HOLE NEED TO BE EXCAVATED TO OUTLET OVERFLOW INTO, THE EXCAVATED HOLE SHALL BE SLOPED TO PREVENT INJURY TO LIVESTOCK AND SHALL BE APPROVED BY APPROPRIATE NRCS PERSONNEL PRIOR TO INSTALLATION.

GRAVEL SHALL BE COMPACTED TO 6" AND BE MAINTAINED ANNUALLY.

DESIGNED BY:
DRAWN BY: M. PIAZZA, S. RAY
CHECKED BY:
FILE NAME:
DATE CHECKED:

WATERING FACILITY
HEAVY USE AREA PROTECTION
COUNTY, TEXAS

NRCS
Natural Resources Conservation Service
U.S. Department of Agriculture

REVISIONS DATE

DRAWING NO.
TX–DWG–9008

SHEET
1