OPTION A

BILL OF MATERIALS

PIPE TYPE _____

TILE MATERIAL AND SHAPE _____

A. _____ FT. BY _____ FT. TILE WITH COVER

B. ONE _____ INCH BY _____ INCH NIPPLE

C. ONE _____ INCH ELBOW

D. _____ CU. YDS. OF ROCK

E. _____ CU. YDS. OF CLEAN RIVER ROCK OR GRAVEL

F. _____ CU. YDS. OF ANTI–SEEP WALL MATERIAL

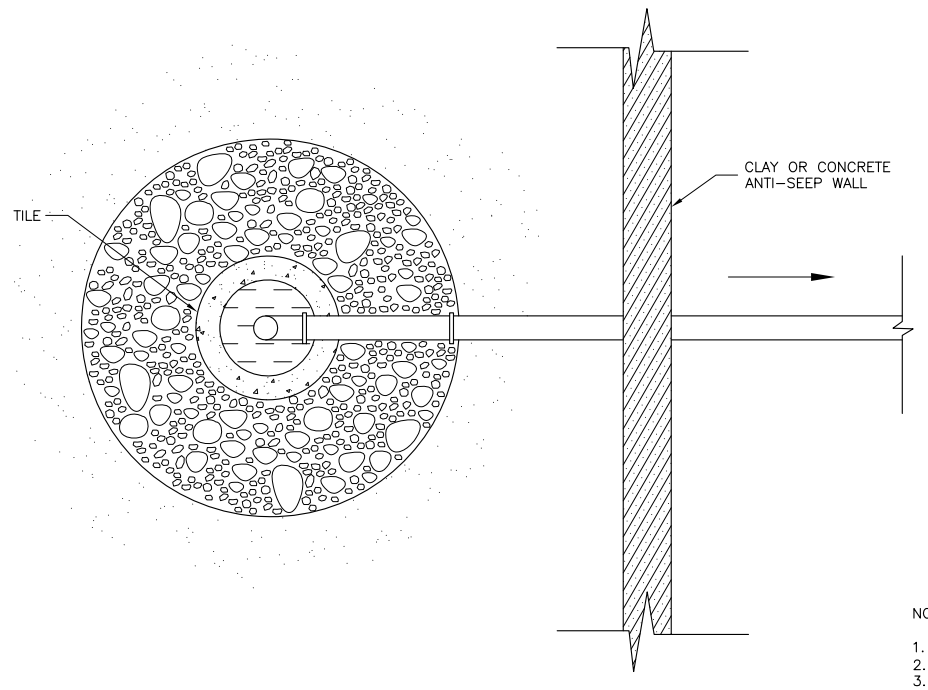

PLAN VIEW

NOT TO SCALE

NOTES:

1. NON–PERFORATED PIPE SHALL BE MINIMUM 1" DIAMETER.
2. PERFORATED PIPE SHALL BE MINIMUM 3" DIAMETER.
3. MINIMUM PIPE SLOPE SHALL BE 0.2%.
4. ROCK SIZE SHALL BE 3" TO 8" ROCK. GRAVEL FILTER SHALL BE 1" CRUSHED ROCK OR 1" CLEAN RIVER ROCK.
5. ALL JOINTS SHALL BE WATER TIGHT SEALED JOINTS.
6. ANTI–SEEP WALL SHALL HAVE A MINIMUM THICKNESS OF 12" OF CLAY MATERIAL OR 6" OF CONCRETE.

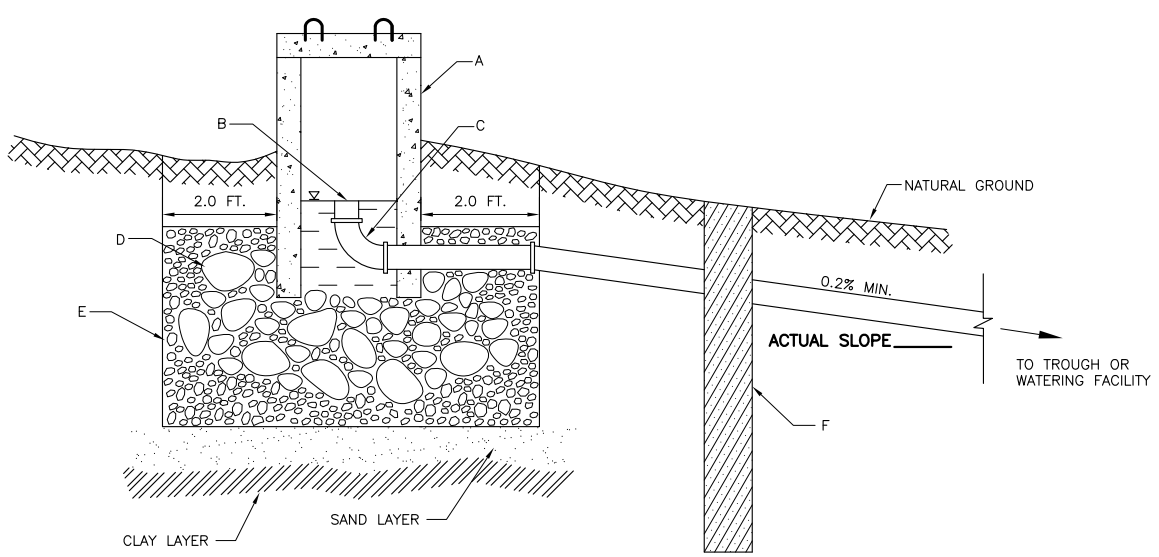

PROFILE VIEW

NOT TO SCALE

OPTION B

BILL OF MATERIALS

PIPE TYPE _____

SPRING BOX MATERIAL AND SHAPE _____

A. _____ FT. BY _____ FT. SPRING BOX WITH COVER

B. _____ FT. OF _____ INCH DIA. NON–PERFORATED PIPE

C. _____ FT. OF _____ INCH DIA. PERFORATED PIPE

D. _____ FT. OF _____ INCH DIA. OVERFLOW PIPE

E. ONE _____ INCH END CAP

F. ONE _____ INCH PIPE JOINT

G. _____ CU. YDS. OF CLEAN RIVER ROCK OR GRAVEL

H. _____ CU. YDS. OF ANTI–SEEP WALL MATERIAL

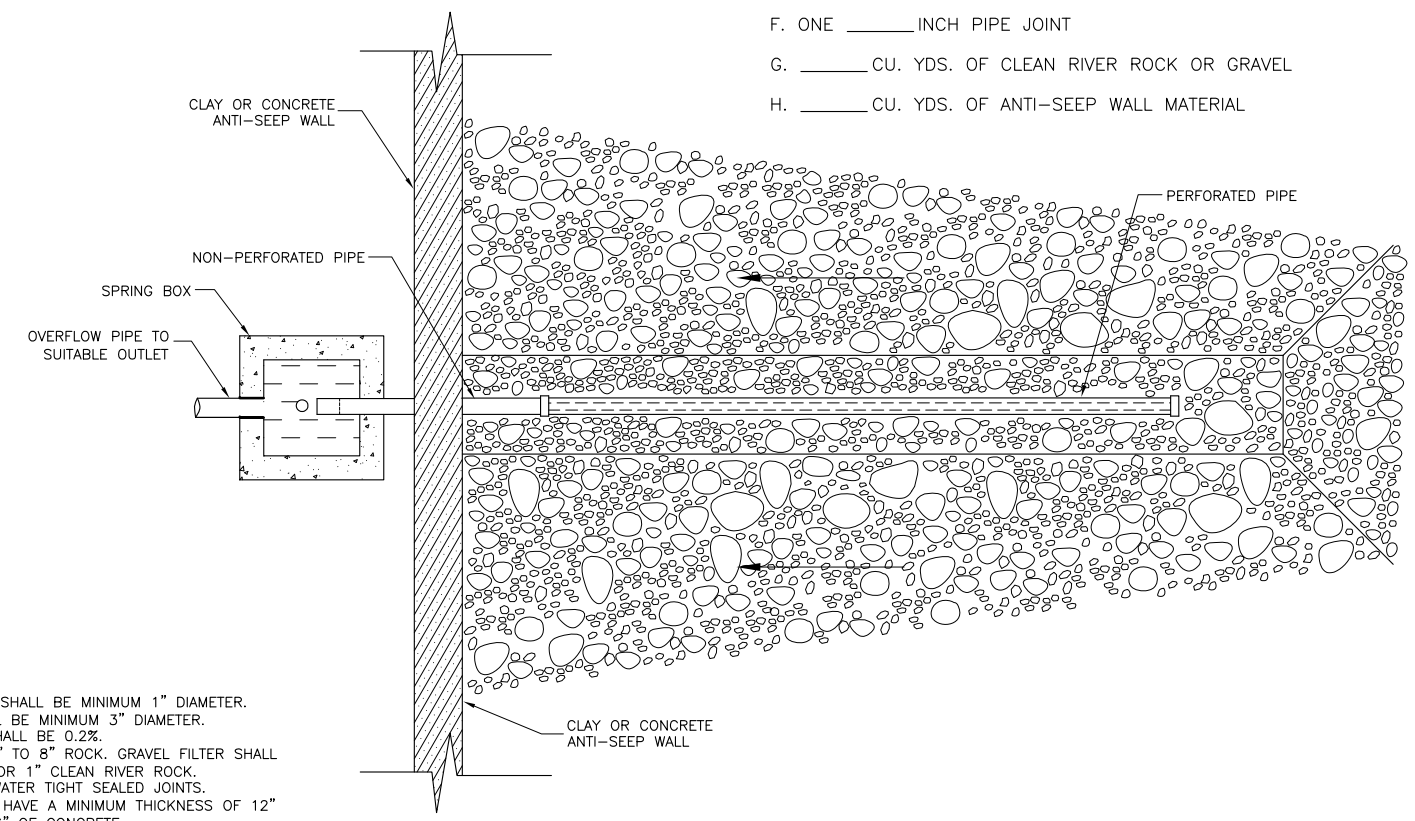

PLAN VIEW

NOT TO SCALE

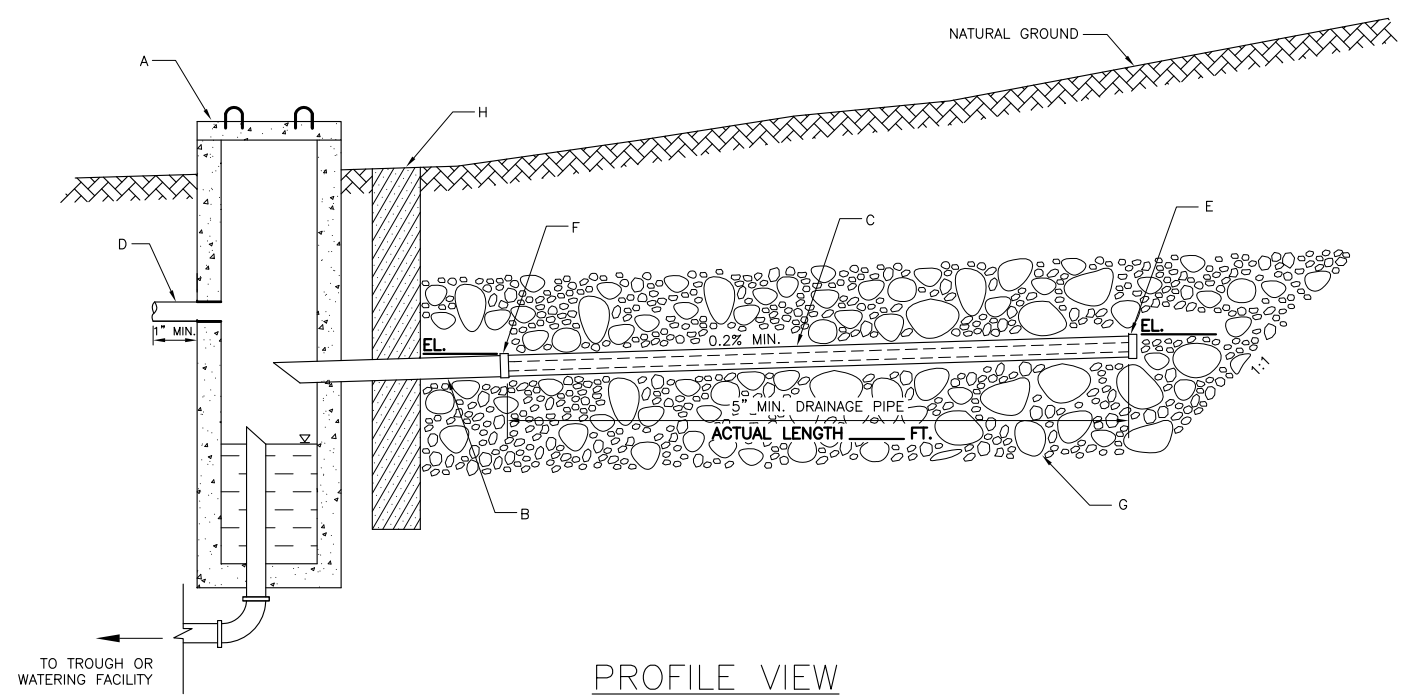

PROFILE VIEW

NOT TO SCALE

This Standard Drawing has been approved by Texas SCE. NRCS employees with proper EJAA may make minor changes to adapt for site specific conditions. Changes affecting practice integrity will require a new custom drawing.

/S/ John Mueller, SCE 20-Jan-2012

DESIGNED BY: _____

APPROVED BY: _____

DATE: _____

DRAWN BY: M. HREBIK

DATE PLOTTED: 1–20–2012

COOPERATOR: _____

SPRING DEVELOPMENT

CONSERVATION PRACTICE STANDARD 574

_____ COUNTY, TEXAS

JOB CLASS: _____

NRCS

United States Department of Agriculture

Natural Resources Conservation Service

REVISIONS	DATE

DRAWING NO.

TX–DWG–9010

SHEET

OF