STANDARD DRAWING—SEE SITE SPECIFIC DESIGN FOR ELEVATIONS AND DIMENSIONS

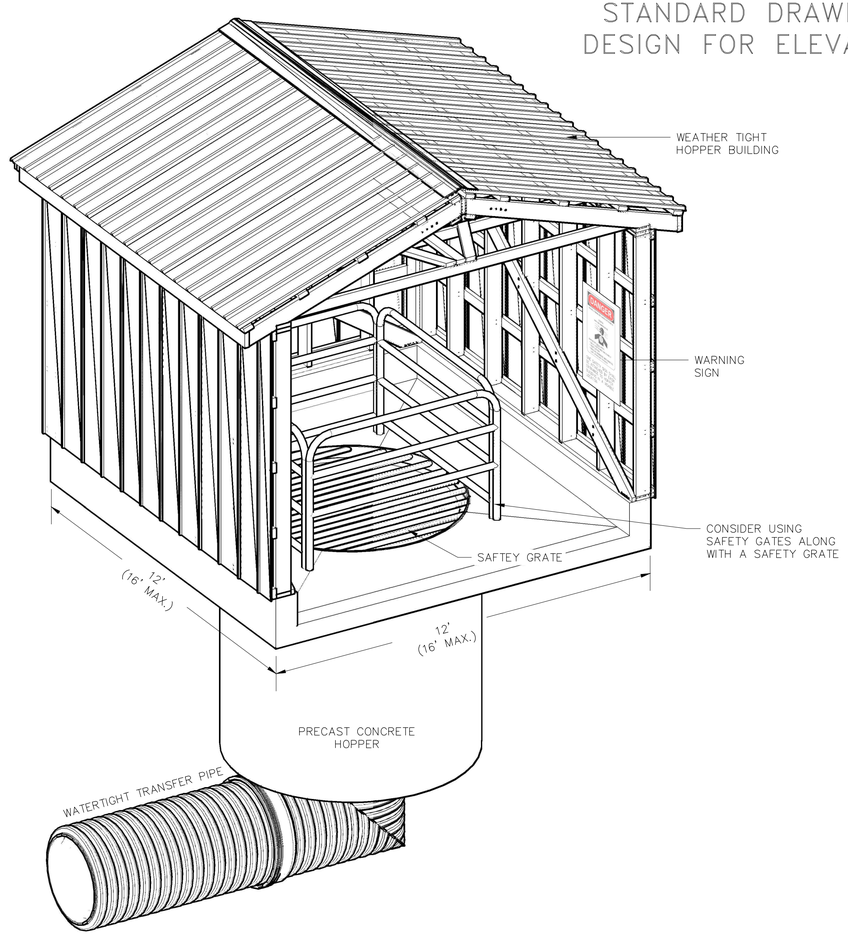

GRAVITY TRANSFER SYSTEM
ISOMETRIC
NTS

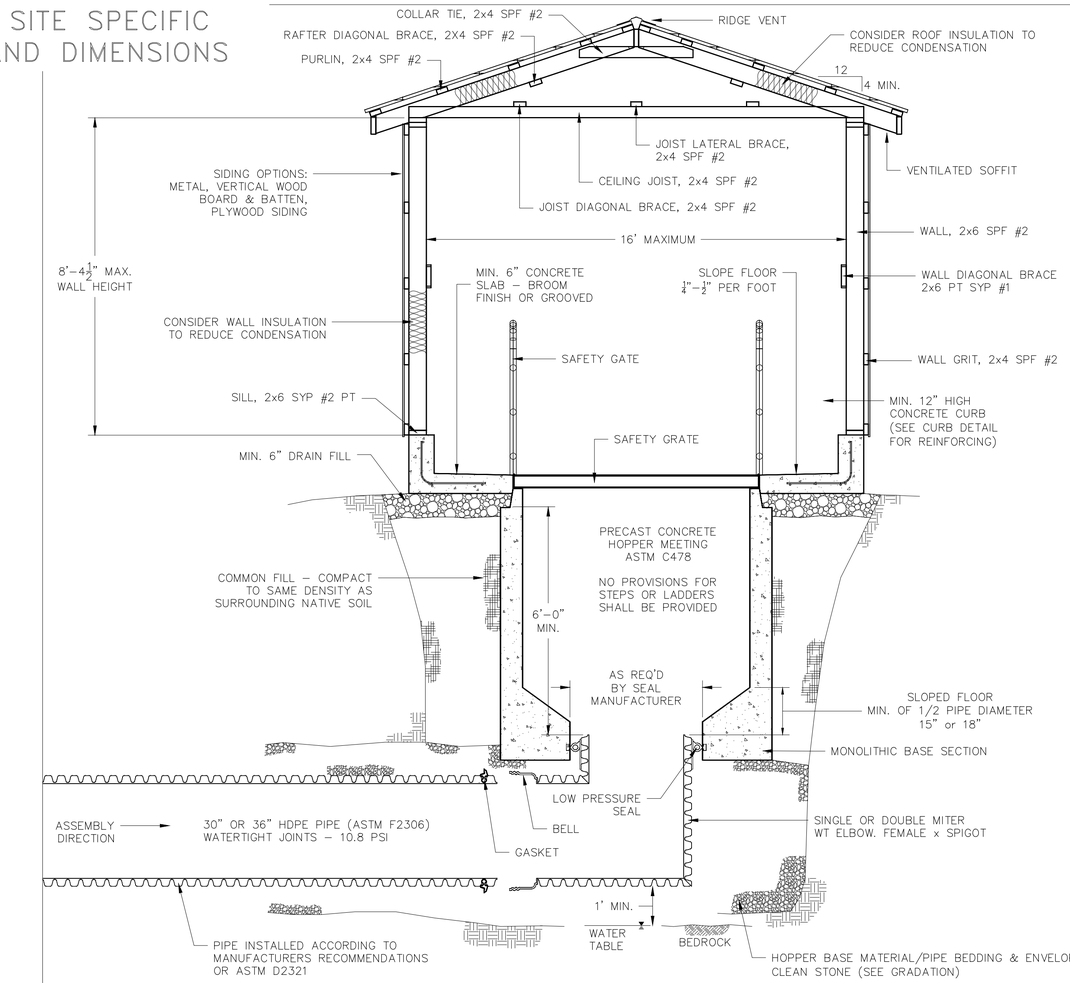

TRANSFER SYSTEM SECTION
SCALE: ½" = 1'-0"

CONSTRUCTION NOTES

1. ALL ITEMS SHALL BE CONSTRUCTED TO THE DIMENSIONS AND ELEVATIONS SHOWN ON THE DRAWINGS.
2. ALL WORK SHALL BE DONE IN ACCORDANCE TO THE PLANS AND SPECIFICATIONS. ANY CHANGES SHALL BE APPROVED BY THE ON SITE NRCS REPRESENTATIVE.
3. ALL PERMITS, EASEMENTS AND RIGHTS OF WAY ARE THE RESPONSIBILITY OF THE LANDOWNER.
4. IT IS THE EXCAVATION CONTRACTORS RESPONSIBILITY TO CALL "DIG SAFE" AND TO COMPLY WITH ALL VERMONT LAWS REGARDING THE LOCATION AND WORK AROUND UTILITIES.
5. IT IS THE EXCAVATION CONTRACTORS RESPONSIBILITY TO FOLLOW ALL VOSHA/OSHA REGULATIONS, INCLUDING EXCAVATION OF TRENCHES.
6. CONCRETE HOPPER SHALL BE SET TO THE ELEVATIONS SHOWN ON THE DRAWINGS ON A MINIMUM OF 6" OF STONE BASE.
7. PIPE TRENCH AND BEDDING SHALL BE INSTALLED TO THE ELEVATIONS SHOWN, WITHIN +/– 2" EVERY 20'.
8. HAUNCH MATERIAL SHALL BE WORKED UNDER THE PIPE WITH HAND TOOLS, AS REQUIRED BY PIPE MANUFACTURER. SEE GRADATION SHEET 2 OF 3
9. INITIAL PIPE BACKFILL SHALL BE INSTALLED TO A MINIMUM OF 6" OVER THE TOP OF THE PIPE. SEE GRADATION SHEET 2 OF 3.
10. REMAINING TRENCH BACKFILL MAY BE COMMON FILL, INSTALLED WITH MODERATE COMPACTION TO PREVENT EXCESSIVE SETTLEMENT.
11. ALL FILL THAT SHALL HAVE CONCRETE PLACED ABOVE IT SHALL BE COMPACTED TO A DENSITY EQUIVALENT TO THAT OF THE SURROUNDING INPLACE EARTH MATERIAL.
12. ALL CONCRETE SHALL BE 3000 PSI, PLACED AT A 3"–5" SLUMP. ALL CAST IN PLACE CONCRETE SHALL BE INSTALLED ACCORDING TO VT NRCS CONSTRUCTION SPECIFICATION #31.
13. A CONCRETE HEADWALL SHALL BE INSTALLED AT THE OUTLET OF THE PIPE, AS SHOWN. SEE SHEET 2 OF 3.
14. A NRCS APPROVED SAFETY GRATE AND/OR RAIL SHALL BE CONSTRUCTED OF DURABLE MATERIALS AND BE IN PLACE AT ALL TIMES.
15. A MINIMUM OF ONE SAFETY SIGN SHALL BE POSTED NEAR ENOUGH TO THE HOPPER SO THAT IT IS EASILY VISIBLE.
16. A WEATHER TIGHT HOPPER BUILDING SHALL BE CONSTRUCTED AS SHOWN. ALL EXTERIOR WOOD SHALL BE TREATED ACCORDING TO VT NRCS CONSTRUCTION SPECIFICATION #48.
17. ALL WOOD CONNECTIONS SHALL BE AS SHOWN. IF SPLITTING OCCURS WITH NAILS, THEN PREBORED HOLES UP TO 75% OF THE NAIL DIAMETER SHALL BE REQUIRED.
18. THE HOPPER BUILDING SHALL HAVE A VENTILATED RIDGE AND SOFFIT. ADDITIONAL VENTILATION MAYBE REQUIRED TO VENT HARMFUL GASES FROM THE BUILDING.
19. ALL EXPOSED AREA SHALL BE SEEDED, FERTILIZED & MULCHED ACCORDING TO CONSTRUCTION SPECIFICATION #52.

FASTENERS

– BOLTS, LAGS	f_{yb}=45,000 PSI MIN. (ANSI/ASME B18.2.1) ASTM A307 GRADE A OR SAE J429 GRADE 1
– ANCHOR BOLTS	MIN. f_b = 36 KSI. HOT DIPPED ASTM F2329 ASTM F1554
– RING SHANKED NAILS	f_{yb}=115,000 PSI MIN. ASTM F1667–05 FOR ENGINEERED CONSTRUCTION
– COMMON NAILS	f_{yb}=90,000 PSI MIN. ASTM F1667–05 FOR ENGINEERED CONSTRUCTION

ALL NAILS SHALL BE HOT DIP GALVANIZED – MEETING ASTM A153–09 CLASS D
ALL BOLTS, LAGS, NUTS & WASHERS – MEETING ASTM A153–09 CLASS C (OR ASTM F2329–05)

STEEL SPECIFICATION – GRATE

PLATE – ASTM A36 FY 36 KSI
PIPE – ASTM A53 GR. B

BILL OF MATERIALS

	ITEM #	ITEM	QUANTITY	UNIT	CONSTRUCTION SPECIFICATIONS
HOPPER	1	EXCAVATING - HOPPER	75	B.C.Y.	1,5,11
	2	CRUSHED OR SCREENED STONE - HOPPER BASE	5	C.Y.	1,5,11
	3	HOPPER, PRECAST CONCRETE, 6' DIA. X 8' DEEP,	1	EA.	31
	4	ELBOW, HDPE 30" WATER TIGHT - INSTALLED W/ CLEAN STONE BACKFILL	1	E.A.	1,5,11,41
	5	PIPE, HDPE 30" WATER TIGHT - INSTALLED W/ CLEAN STONE ENVELOPE	0	L.F.	1,5,11,41
	6	CONCRETE HEADWALL - 5'X5'X1'	1	C.Y.	31
	7	BACKFILL - HOPPER, COMMON FILL, COMPACTED	60	C.Y.	1,5,11
	8	BANK RUN GRAVEL - HOPPER SLAB DRAINFILL	8	C.Y.	1,5,11
	9	SLAB, CONCRETE, 6", 3000PSI, CURING CMPD., SAW CUT 15' O.C. E.W.	3	C.Y.	31
	10	CURB, CONCRETE, 6"X24"H, 3000PSI, #4 @ 12" E.W., CURING COMPD.	36	L.F.	31
	11	SAFETY GRATE-6' DIAM. , 4" STEEL PIPE	1	Ea.	41,46
	12	1/2" X 9' CONCRETE ANCHOR BOLTS, ASTM F1554	9	EA.	48
HOPPER BLDG 12'x12'	13	WOOD SILL PLATE - 2X6X12 PT SYP #1 OR #2	3	EA.	48
	14	WOOD WALL STUDS - 2X6X8 SPF #1 OR #2	23	EA.	48
	15	WOOD TOP PLATE - 2X6X12 SPF #1 OR #2	6	EA.	48
	16	WOOD WALL BRACES - 2X6X16 SYP #1	3	EA.	48
	17	WOOD WALL GIRTS - 2X4X12 SPF #1 OR #2	15	EA.	48
	18	WOOD CEILING JOIST - 2X4X12 SPF #1 OR #2	7	EA.	48
	19	WOOD CEILING JOIST BRACING - 2X4X12 SPF #1 OR #2	1	EA.	48
	20	WOOD CEILING JOIST BRACING - 2X4X14 SPF #1 OR #2	2	EA.	48
	21	WOOD RAFTERS - 2X6X8 SPF #1 OR #2	14	EA.	48
	22	RAFTER TO PLATE HOLDDOWNS	14	EA.	48
	23	WOOD RAFTER BRACING - 2X4X14 SPF #1 OR #2	2	EA.	48
	24	WOOD RAFTER COLLAR TIES - 2X4X3 SPF #1 OR #2	7	EA.	48
	25	WOOD RIDGE BOARD - 2X6X12 SPF #1 OR #2	1	EA.	48
	26	SIDING (3 SIDES)	288	S.F.	46,48
	27	ROOFING	192	S.F.	46,48
	28	SAFETY SIGNS, STRUCTURE OR HOPPER	1	EA.	50

NO.	DATE	DESCRIPTION	BY
1	3–25–15	INITIAL DRAWING	TKJ
2	4–3–15	CORRECTIONS	TKJ
3	8–14–15	REMOVE GROUT SEAL	TKJ

Designed TATE JEFFREY — Date 3/15
Drawn TATE JEFFREY — Date 3/15
Checked JAKE CLOUGH — Date 4–1–15
Approved by — Date 4–6–15

USDA United States Department of Agriculture
Natural Resources Conservation Service

HAZARD CLASS LOW
JOB CLASS IV

VERMONT STANDARD DRAWING
GRAVITY WASTE TRANSFER
HOPPER WITH BOTTOM OUTLET
VERMONT

File Name
Drawing Name VT–HOPBOTOUT–STD

Sheet 1 of 3

STANDARD DRAWING–SEE SITE SPECIFIC DESIGN FOR ELEVATIONS AND DIMENSIONS

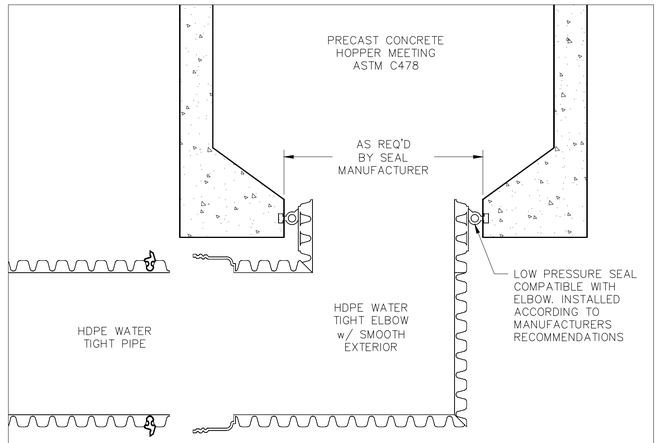

NOTE: ORDER ELBOW WITH MITER ANGLE TO MATCH PIPE SLOPE

MANHOLE CONNECTION–SMOOTH WALL PIPE
SCALE: $\frac{3}{4}$" = 1'–0"

DESIGN LOADING: 100 PSF
STEEL SPECIFICATION:
PLATE – ASTM A36 FY 36 KSI
PIPE – ASTM A53 GR. B

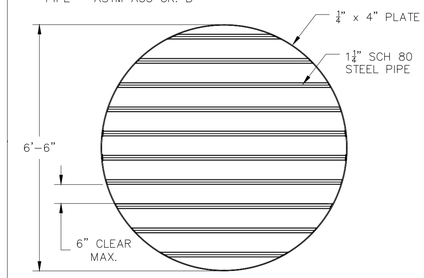

SAFETY GRATE – NON DRIVE ON
TOP VIEW
SCALE: $\frac{1}{2}$" = 1'–0"

DESIGN LOADING: 2,500# WHEEL LOAD
STEEL SPECIFICATION:
PLATE – ASTM A36 FY 36 KSI
PIPE – ASTM A53 GR. B

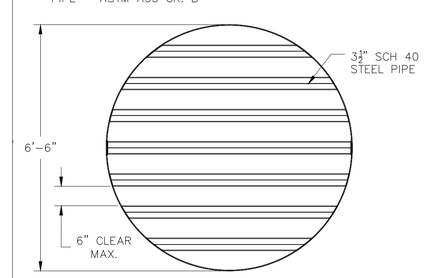

SAFETY GRATE – DRIVE ON
TOP VIEW
SCALE: $\frac{1}{2}$" = 1'–0"

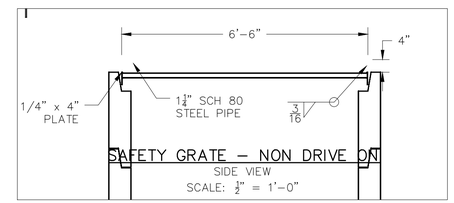

SAFETY GRATE – NON DRIVE ON
SIDE VIEW
SCALE: $\frac{1}{2}$" = 1'–0"

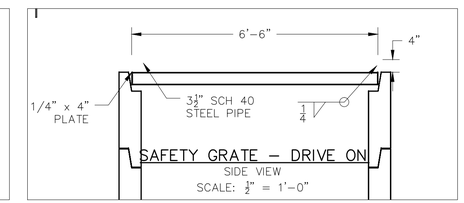

SAFETY GRATE – DRIVE ON
SIDE VIEW
SCALE: $\frac{1}{2}$" = 1'–0"

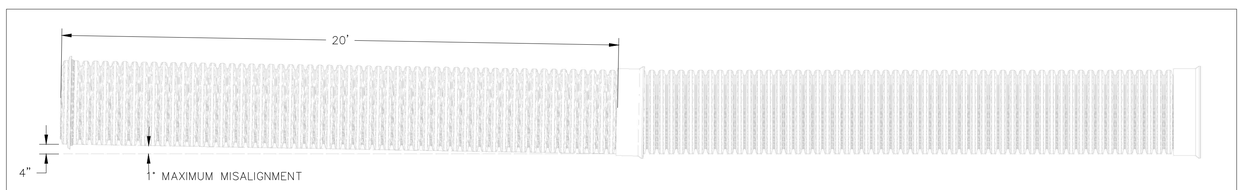

PIPE ALIGNMENT
SCALE: $\frac{3}{8}$" = 1'–0"

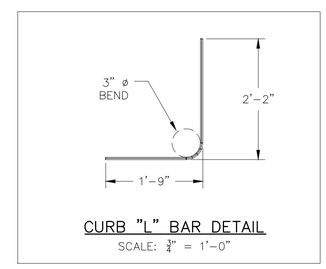

CURB "L" BAR DETAIL
SCALE: $\frac{3}{4}$" = 1'–0"

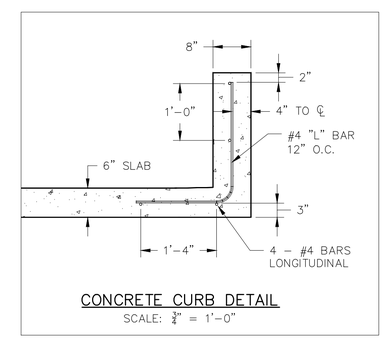

CONCRETE CURB DETAIL
SCALE: $\frac{3}{4}$" = 1'–0"

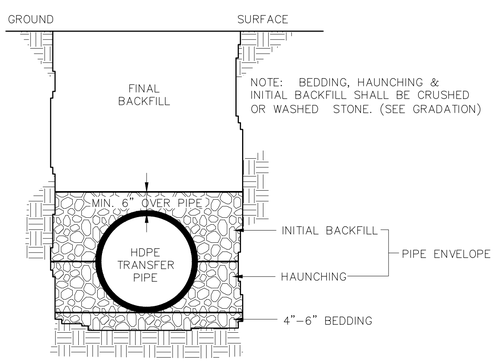

MIN. TRENCH WIDTH:
30" PIPE – 5.0'
36" PIPE – 5.5'

NOTE: HAUNCH MATERIAL SHALL BE WORKED UNDER PIPE AND INTO CORRUGATIONS WITH HAND TOOLS.

HDPE TRENCH DETAIL
NTS

PIPE BEDDING & ENVELOPE GRADATION

SIEVE SIZE	% PASSING
1"	100
$\frac{3}{4}$"	90 – 100
$\frac{3}{8}$"	20 – 55
#4 (.187")	0 – 10
#16 (.0465")	0 – 5

DRAINFILL GRADATION

SIEVE SIZE	% PASSING
4"	100
#4 (.187")	20 – 60
#100 (.0984")	0 – 12
#200 (.00295")	0 – 6

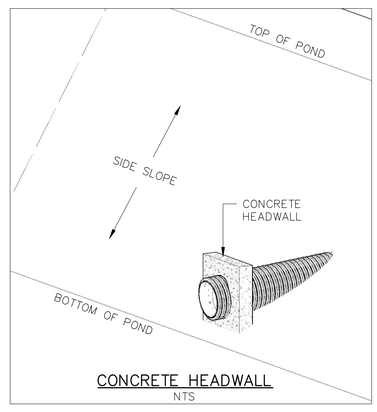

CONCRETE HEADWALL
NTS

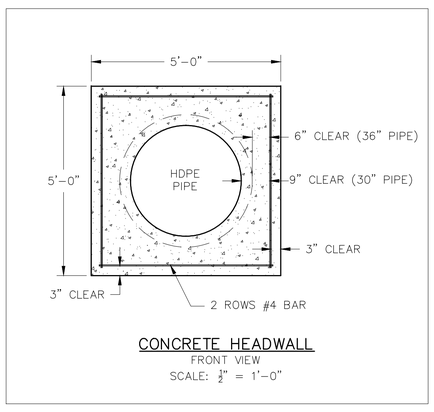

CONCRETE HEADWALL
FRONT VIEW
SCALE: $\frac{1}{2}$" = 1'–0"

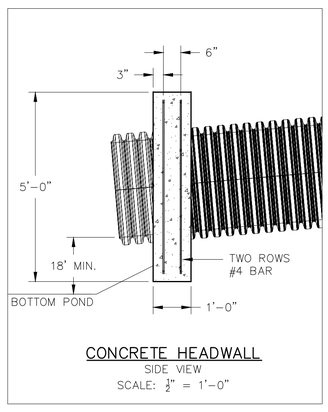

CONCRETE HEADWALL
SIDE VIEW
SCALE: $\frac{1}{2}$" = 1'–0"

	Date
Designed TATE JEFFREY	3/15
Drawn TATE JEFFREY	3/15
Checked JAKE CLOUGH	4-1-15
Approved by	4-6-15

United States Department of Agriculture
Natural Resources Conservation Service

HAZARD CLASS LOW

JOB CLASS IV

VERMONT STANDARD DRAWING
GRAVITY WASTE TRANSFER
HOPPER WITH BOTTOM OUTLET

VERMONT

File Name

Drawing Name
VT–HOPBOTOUT–STD

Sheet 2 of 3

STANDARD DRAWING–SEE SITE SPECIFIC
DESIGN FOR ELEVATIONS AND DIMENSIONS

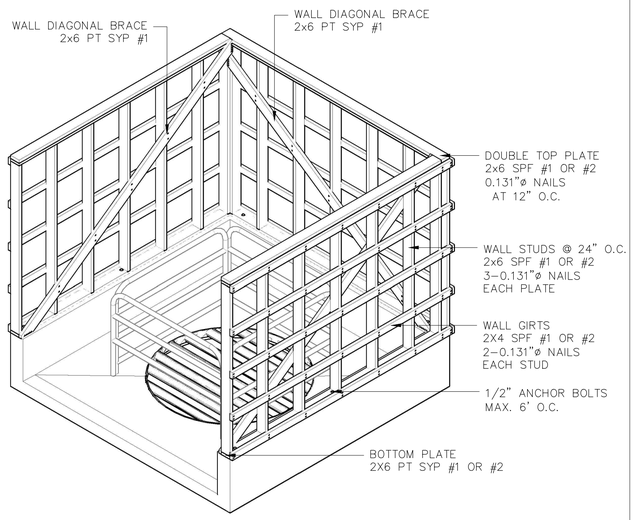

WALL BRACING–HOPPER BUILDING
ISOMETRIC
NTS

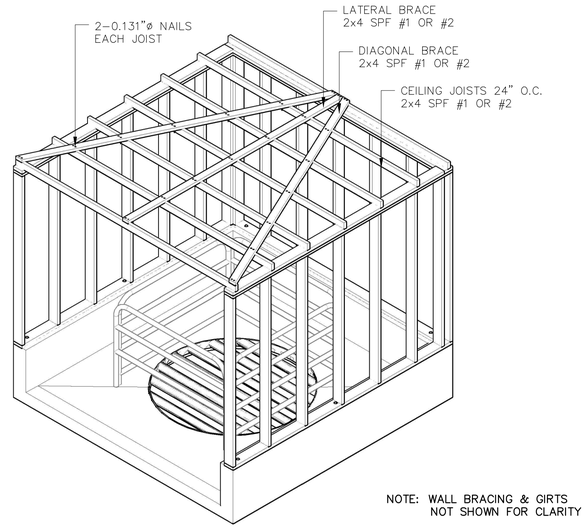

CEILING JOIST BRACING–HOPPER BUILDING
ISOMETRIC
NTS

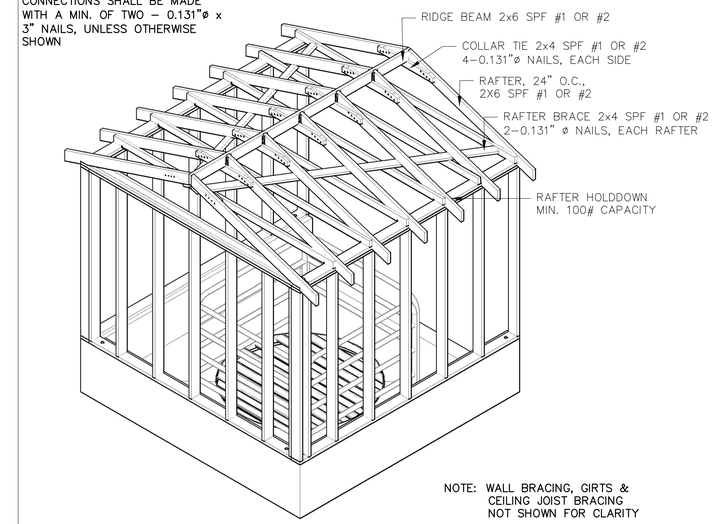

RAFTER BRACING–HOPPER BUILDING
ISOMETRIC
NTS

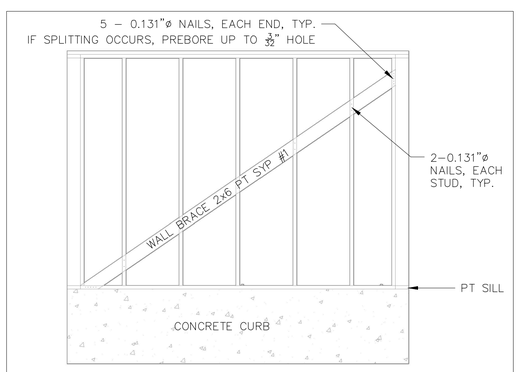

WALL BRACE CONNECTIONS–HOPPER BUILDING
SCALE: 3/8" = 1'–0"

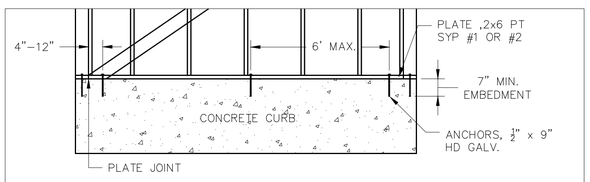

WALL PLATE ANCHORS–HOPPER BUILDING
SCALE: 3/8" = 1'–0"

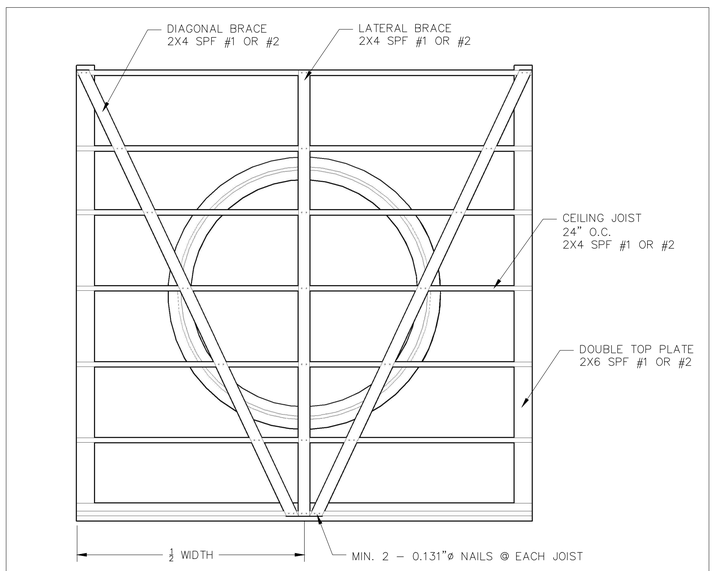

CEILING JOIST BRACING–HOPPER BUILDING
TOP VIEW
SCALE: 1/2" = 1'–0"

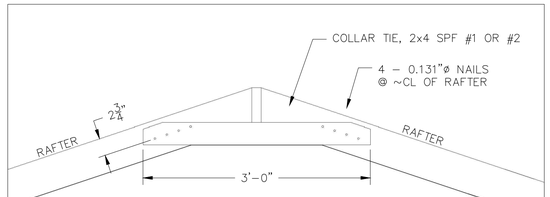

RAFTER COLLAR TIE–HOPPER BUILDING
SCALE: 1" = 1'–0"

		Date
Designed	TATE JEFFREY	3/15
Drawn	TATE JEFFREY	3/15
Checked	JAKE CLOUGH	4-1-15
Approved by		4-6-15

USDA United States Department of Agriculture
Natural Resources Conservation Service

HAZARD CLASS
LOW

JOB CLASS
IV

VERMONT STANDARD DRAWING
GRAVITY WASTE TRANSFER
HOPPER WITH BOTTOM OUTLET

VERMONT

File Name

Drawing Name
VT–HOPBOTOUT–STD

Sheet 3 of 3