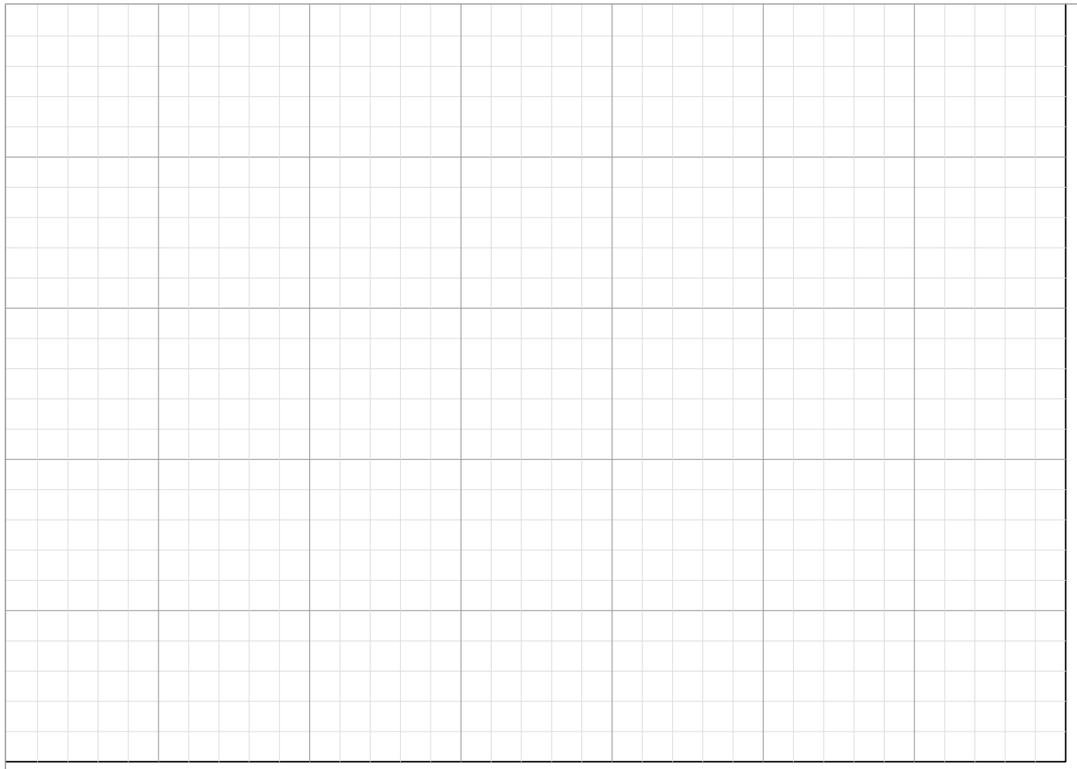

## PLAN VIEW

Aggregate

Aggregate shall be crushed gravel or stone and conform to the quality and gradations of ASTM C-33 or AASHTO M-43.

Base aggregate shall be no smaller than #57 coarse aggregate.

To accommodate livestock foot traffic, two (2) inches of surface aggregate will be placed over the 6 in. of base aggregate. Crusher Run is an acceptable surface treatment. Gradation for surface aggregate shall be no larger than #57 coarse aggregate.

If no surface treatment is required, the thickness of the base aggregate shall be increased to 8 in.

Construction Fabric

Geotextile shall be woven Class IV material. See Table 2 in Construction Specification 795 for fabric requirements.

Acceptable fabrics include but are not limited to:
GeoTex 200ST, Mirafi 500X and Thrace-Linq GTF 200S. These are some of the most commonly available fabrics but others may be used pending approval.

**CONSTRUCTION NOTES**

1. All topsoil and organic material shall be removed from pad surface prior to placement of geotextile fabric or stone aggregate.
2. Topsoil shall be stockpiled to be spread over spoil after excavation of subgrade.
3. All disturbed areas shall be seeded and mulched according to NRCS specifications.
4. The moisture content of the fill prior to compacting must be suitable to form a hand held ball that does not break apart.
5. Fill shall be placed in uniform horizontal layers of a maximum thickness of 9 inches prior to compaction.
6. Each layer of the fill will be uniformly compacted by a minimum of 4 passes of rubber tired equipment with a minimum wheel load of 4000 lb. Additional compaction or soil stabilization may be necessary for terraced fills.
7. Geotextile fabric shall be overlapped a minimum of 18 inches.
8. No compaction of aggregate is required beyond placing and spreading.

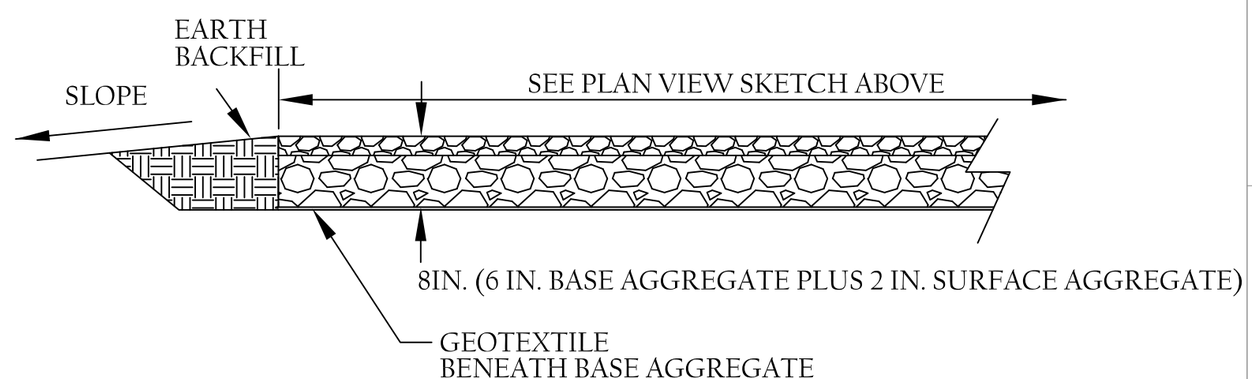


## CROSS SECTION

| QUANTITIES | | | |
|---|---|---|---|
| MATERIAL | TYPE | ESTIMATED | AS BUILT |
| 6 in. Aggregate Base (tons) | | | |
| 2 in. Surface Treatment (tons) | | | |
| Geotextile (sf) | | | |

REV. DECEMBER 2015

Date

Designed

Checked

Approved

Const. Check

HEAVY USE AREA PROTECTION - AGGREGATE
FIELD SHEET
WEST VIRGINIA NRCS

United States Department of Agriculture
Natural Resources Conservation Service

File No. 561

Drawing No. HUAP - AGG.

Sheet 1 of 1

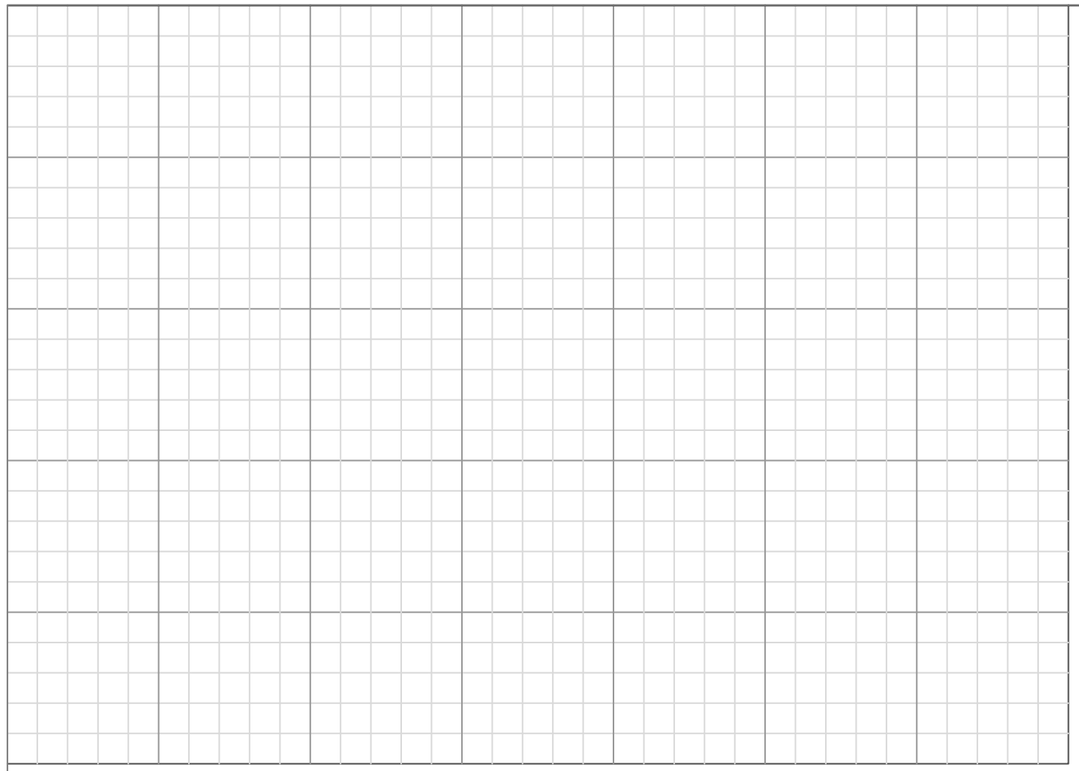

PLAN VIEW

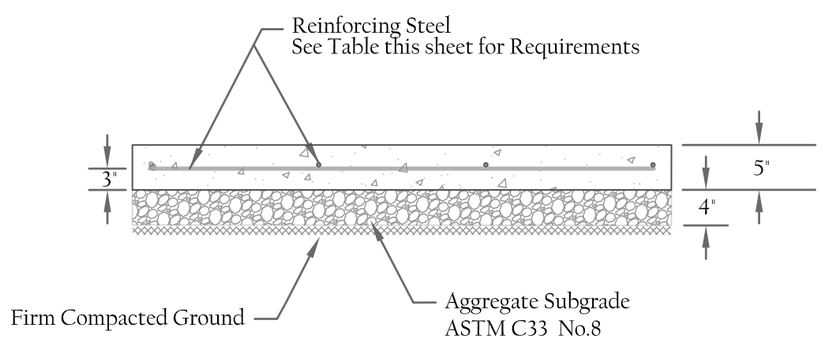


TYPICAL CONCRETE SLAB

***See HUAP -Concrete Detail Sheet for Joint and Curb Requirements***

**CONSTRUCTION NOTES**

1. All topsoil and organic material shall be removed from surface prior to grading and placement of stone aggregate.
2. Topsoil shall be stockpiled to be spread over spoil after excavation of subgrade.
3. All disturbed areas shall be seeded and mulched according to NRCS Construction Specification 706.
4. The moisture content of the fill prior to compacting must be suitable to form a hand held ball that does not break apart.
5. Fill shall be placed in uniform horizontal layers of a maximum thickness of 9 inches prior to compaction.
6. Each layer of the fill will be uniformly compacted by a minimum of 4 passes of rubber tired equipment with a minimum wheel load of 4000 lb. Additional compaction or soil stabilization may be necessary for terraced fills.
7. No compaction of aggregate is required beyond placing and spreading.
8. See NRCS Concrete Construction Specification 732 and NRCS Steel Reinforcement Construction Specification 734 for slab and reinforcement steel requirements.
9. Isolation joints shall be used where newly poured concrete abuts existing concrete or abuts to a structure: buildings, posts,etc.
10. Construction Joints (bulkhead) should be used when the concrete will harden between pours.
11. Unless otherwise noted, provide two (2) inches cover over reinforcement where concrete is cast against forms or finished surface and three (3) inches cover over reinforcement where concrete is cast against earth or granular base surfaces.
12. Seal joints as required.
13. Cooperator shall notify NRCS 72 hours prior to concrete placement to inspect subgrade, forms and steel.
14. As required, backer rod shall be ⅛" larger than width of joint and elastomeric sealant shall be ¼" deep.

TABLE - CONCRETE SLAB

| TYPE | CONTRACTION JOINT SPACING | REINFORCEMENT STEEL SIZE AND SPACING | SLAB THICKNESS | LAP SPLICE |
|---|---|---|---|---|
| S-1 | 10 Ft. | None Required | 5" | — |
| S-2 | 35 Ft. | #3 at 18" C-C | 5" | 20" |

This project is designed requiring Type S-___ Concrete Slab.

QUANTITIES

| MATERIAL | TYPE | ESTIMATED | AS BUILT |
|---|---|---|---|
| Excavation | Cubic Yards | | |
| #8 Subgrade Aggregate | Tons | | |
| Concrete | Cubic Yards | | |
| #3 (⅜") Reinforcing Steel Rebar | Linear Feet | | |
| ½ " Expansion Joint (Isolation) Material | Linear Feet | | |
| ¾" Smooth Steel Dowel | Each | | |
| PVC Waterstop Material | Linear Feet | | |
| | | | |
| | | | |

REV. DECEMBER 2015

Date

Designed _____

Checked _____

Approved _____

Const. Check _____

HEAVY USE AREA PROTECTION (HUAP) - CONCRETE
FIELD SHEET
WEST VIRGINIA NRCS

United States Department of Agriculture

Natural Resources Conservation Service

File No. 561

Drawing No. HUAP Conc(1)

Sheet 1 of 2

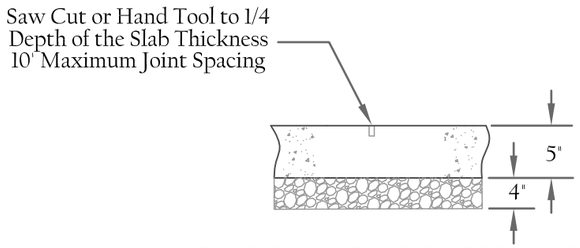


S1 CONTROL (CONTRACTION) JOINT

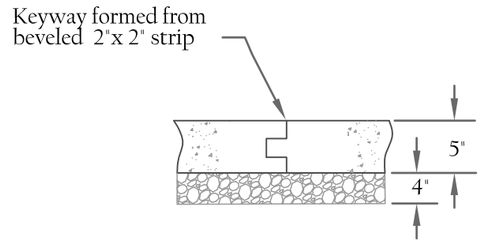


S1 CONSTRUCTION JOINT

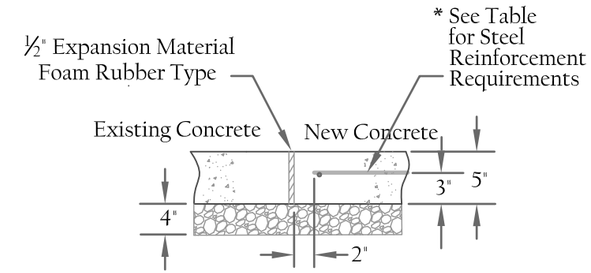


EXPANSION JOINT

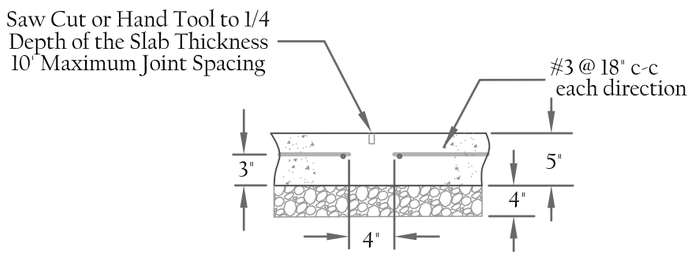


S2 CONTROL (CONTRACTION) JOINT

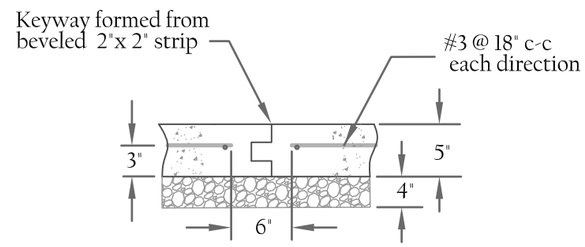


S2 CONSTRUCTION JOINT

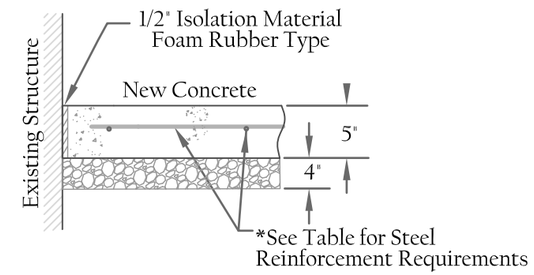


ISOLATION JOINT

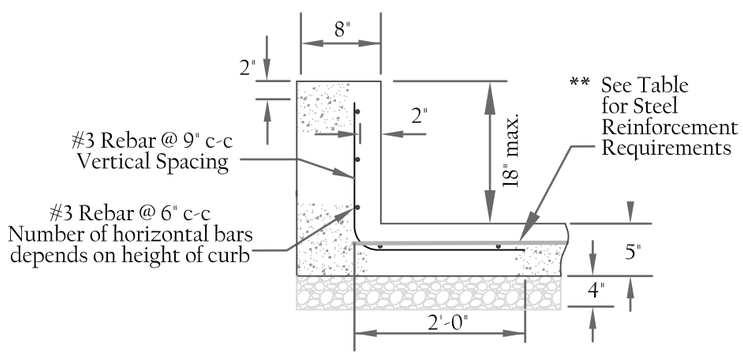


*Concrete Curbing Shall Follow Joint Spacing as per Table 1*

18" MAXIMUM CONCRETE CURBING

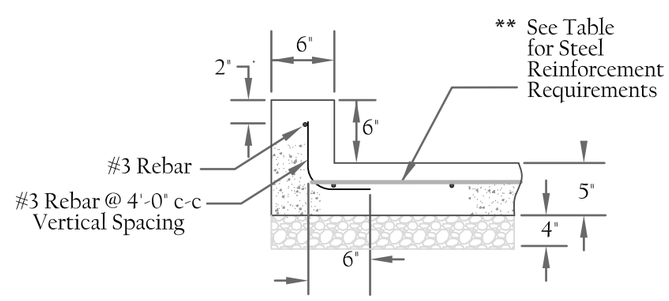


*Concrete Curbing Shall Follow Joint Spacing as per Table 1*

6" CONCRETE CURBING

**Construction Notes**

1. Preformed expansion joint filler shall conform to the requirements of ASTM D-1752, Type 1, Type II or Type III.
2. All reinforcing steel shall be Grade 60.

*****See Table on HUAP-Concrete Sheet for Reinforcing Steel and Joint Spacing Requirements***

REV. DECEMBER 2015

Designed ____ Date ____
Checked ____
Approved ____
Const. Check ____

HEAVY USE AREA PROTECTION - CONCRETE DETAILS
FIELD SHEET
WEST VIRGINIA NRCS

United States Department of Agriculture
Natural Resources Conservation Service

File No. 561
Drawing No. HUAP Conc (2)
Sheet 2 of 2